Publication 445
January 2004
Part No. 41570.45

PA55
PA60
HY REACH
Parts Manual

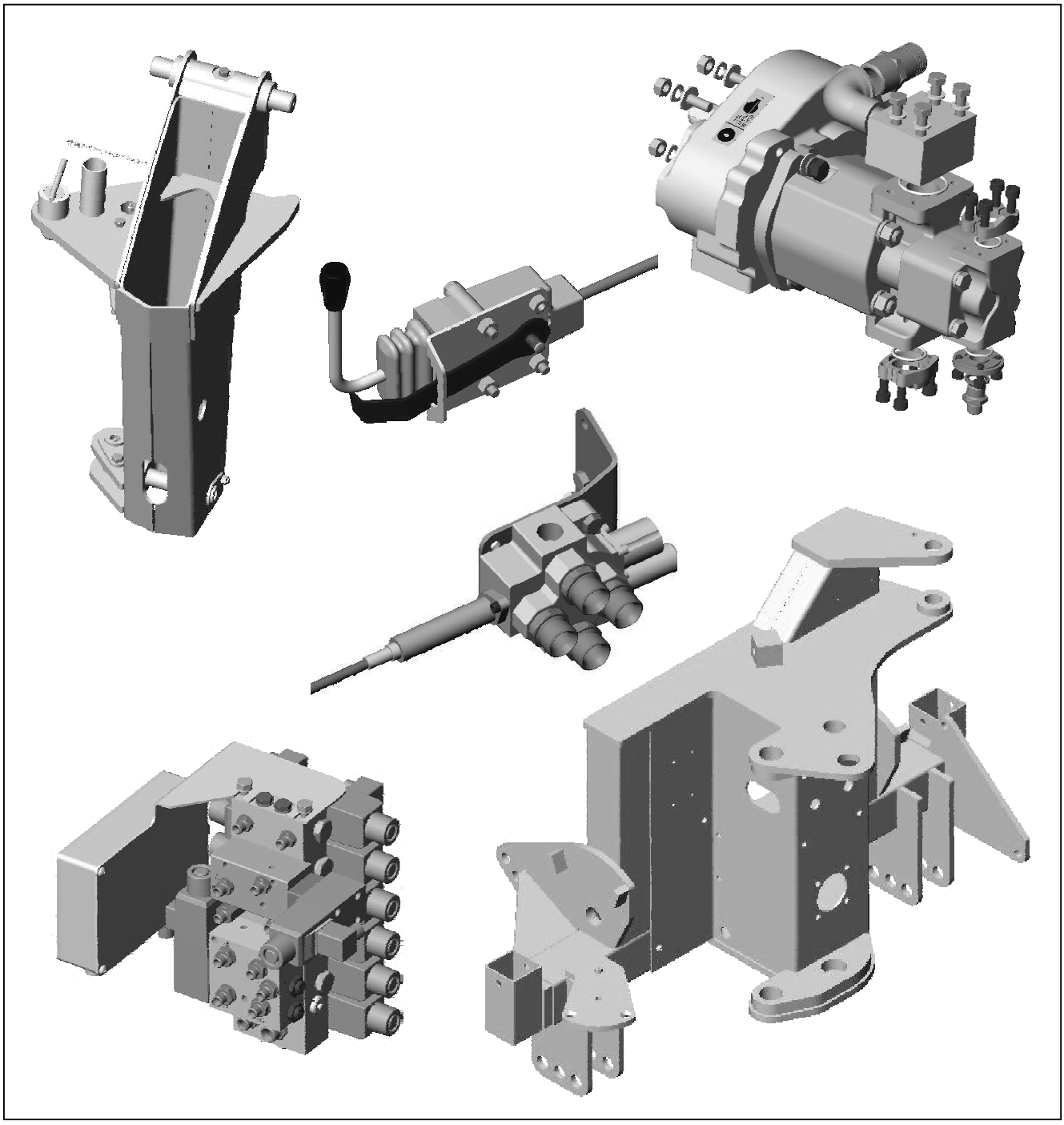

For best performance…

USE ONLY McCONNEL SERVICE PARTS

To be assured of the latest design improvements purchase your ***'Genuine Replacements'*** *from the* ***Original Equipment Manufacturer****:* **McCONNEL LIMITED** *through your local Dealer or Stockist.*

Always quote:

- ***Machine Type***
- ***Serial Number***
- ***Part Number***

Design Improvements may have altered some of the parts listed in this manual – The latest part will always be supplied when it is interchangeable with an earlier one.

Genuine Parts - Quality Service

LIST OF CONTENTS

	Page No.
MAINFRAME COMPONENTS & ARMS	
Stabiliser Assembly	1
Axle Bracket Kit - Standard	3
Axle Bracket Kit - Alternative	5
Main Frame Assembly	7
Pillar Assembly	9
Rocker Assembly – Standard Models	11
Rocker Assembly – EDS Models	13
Main Arm Assembly	15
Dipper Arm Assembly – Standard	17
Dipper Arm Assembly – Midcut	19
Midcut Forward Extension	21
Head Angling Mechanism	23
Hydraulic Tank Assembly	25
Hydraulic Tank Fittings – *Additional specific components*	27
PUMPS & GEARBOXES	
Pump & Gearbox Assembly – Si Models	29
Pump & Gearbox Assembly – Ti Models	31
Pump & Gearbox Assembly – Ti Models	33
VALVES	
Rotor Relief Valve Assembly – Si Models	35
Cable Rotor Control Valve Assembly	37
Electric Rotor Control Valve Assembly	39
Cable Control Valve Assembly	41
Electric Control Valve Assembly	43
Proportional Control Valve Assembly	45
Midcut Proportional Control Valve Assembly	47
HOSE INSTALLATIONS	
ACV Hose Installation – Cable Models	49
ACV Hose Installation – Electric/Proportional Models	51
Hydraulic Hose Kits – PA55 Models	53
Hydraulic Hose Kits – PA60 Models	55
SERVICE RELIEF & FLOAT KITS	
Midcut Service Relief Kit	57
Flail Accumulator Kit *(Optional Extra)*	58
Float Kit Assembly – Cable *(Optional Extra)*	59
Float Kit Assembly – Electric *(Optional Extra)*	61
HYDRAULIC RAMS	
Angling Ram Assembly	63
Lift Ram Assembly	64
Reach Ram Assembly – PA55 Models	65
Reach Ram Assembly – PA60 Models	66
Slew Ram Assembly	67
Fold Ram Assembly – Midcut Models	68
ADDITIONAL HYDRAULIC COMPONENTS	
Hydraulic Installation Sundries	72

LIST OF CONTENTS *(Continued)*

Page No.

MACHINE CONTROLS
Switchbox Controls & Loom Assembly 69
Monolever Controls & Loom Assembly 71
Proportional Armrest Controls 73
Auxiliary Box Wiring Diagram 75
Control Mountings – Cable, Electric & Proportional 77

SENSORS
Sensor Kits for EDS, Power Monitor & PTO 79

OVER CENTRE VALVE
Over Centre Valve Kit 81

OIL COOLER
Oil Cooler Assembly 83

MACHINE COVERS
Covers Assembly – Cooler Models 85
Covers Assembly – Non Cooler Models 87

LIGHTING
Rear Lighting Kit 89

SAFETY GUARDING
Cab Guard Kit 91

MACHINE PACKAGING
Machine Packaging Sundries 92

MACHINE DECALS
Machine Decals 93

OPTIONAL EXTRAS
Rear Magnetic Sign Kit 95
Debris Blower Mounting Kit 96

STABILISER ASSEMBLY

Module:
7155718

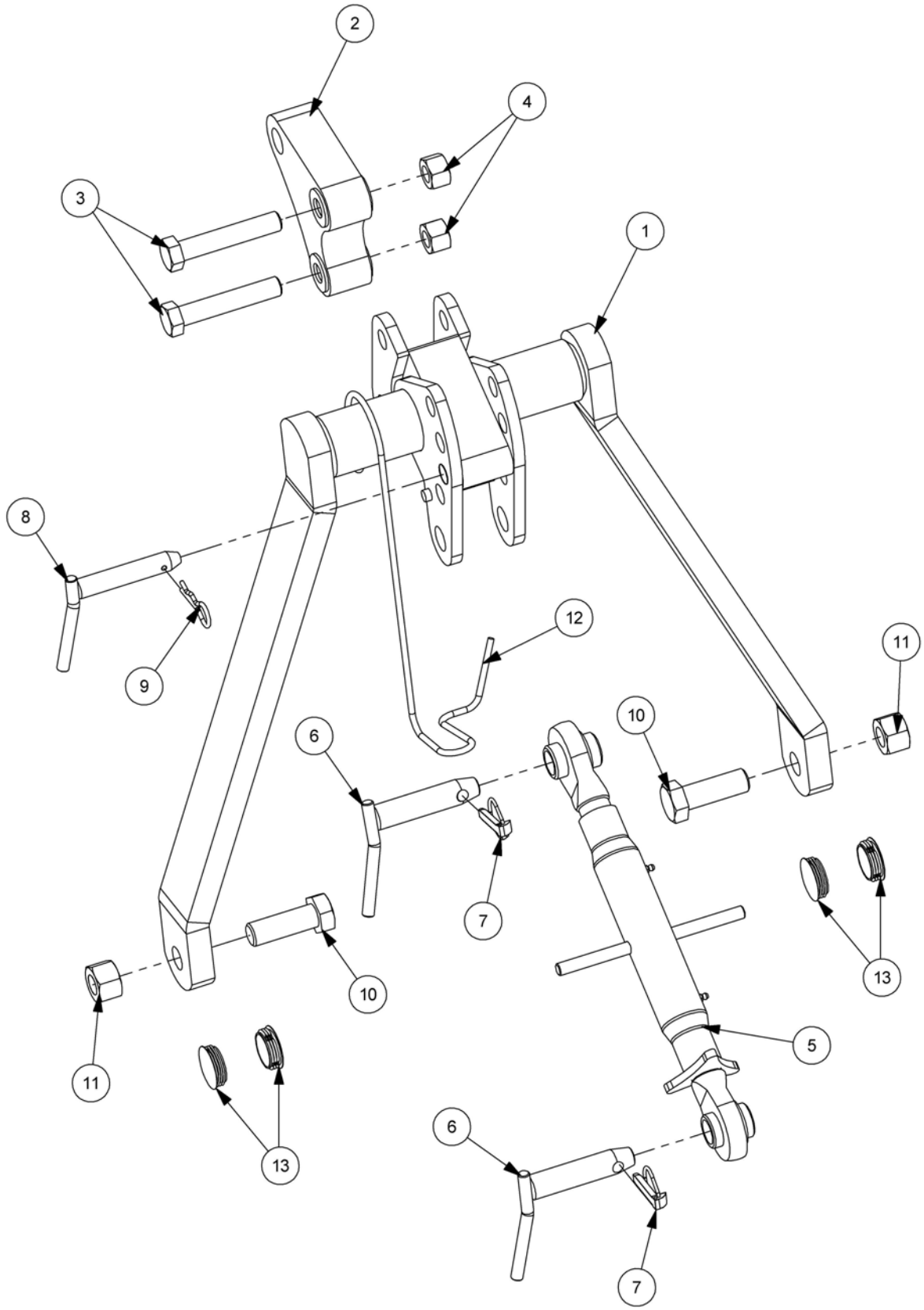

STABILISER ASSEMBLY

REF.	QTY.	PART No.	DESCRIPTION
		7155718	**STABILISER ASSEMBLY**
1	1	41205.03	STABILIZER
2	1	7499501	TONGUE - CAT.2
3	2	9213228	BOLT
4	2	9143008	SELF-LOCKING NUT
5	1	21370.01	TOP LINK ASSEMBLY - HEAVY DUTY
6	1	43342.01	TOP LINK PIN
7	1	0431217	LINCH PIN
8	1	45784.01	QUADRANT PIN
9	1	0431105	SPRING COTTER
10	2	9213149	BOLT
11	2	9143009	SELF-LOCKING NUT
12	1	21160.03	PTO HOOK
13	4	21388.01	PLASTIC INSERT

McCONNEL STABILISER TONGUES

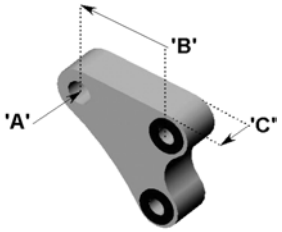

'A' *– Hole diameter*
'B' *– Hole center spacing*
'C' *– Stabiliser width*

(Dimensions in mm)

Part No.	Description	'A'	'B'	'C'
7499501	Tongue: Standard – Cat. 2	*27*	*107*	*45*
7499500	*Tongue: Special – Cat. 2 narrow*	*27*	*107*	*35*
7499502	*Tongue: Special – Cat. 2 long*	*27*	*217*	*45*
7499503	*Tongue: Special – Cat. 3 long*	*32*	*217*	*45*
7499504	*Tongue: Special – Cat. 1*	*19.5*	*107*	*35*
7499505	*Tongue: Special – Cat. 2 for Case TX tractors*	*25*	*120*	*50*
7499506	*Tongue: Special – Cat. 3*	*32*	*107*	*45*
7499507	*Tongue: Special – Cat. 3 narrow*	*32*	*107*	*30*
7499508	*Tongue: Special – for some Ford tractors*	*28.6*	*107*	*45*
7499262	*Tongue: Special – Cat. 2 extra long for Aebi*	*27*	*260*	*45*
7499510	*Tongue: Special – Cat. 2*	*27*	*107*	*40*

AXLE BRACKET KIT - Standard

Module:
7155716

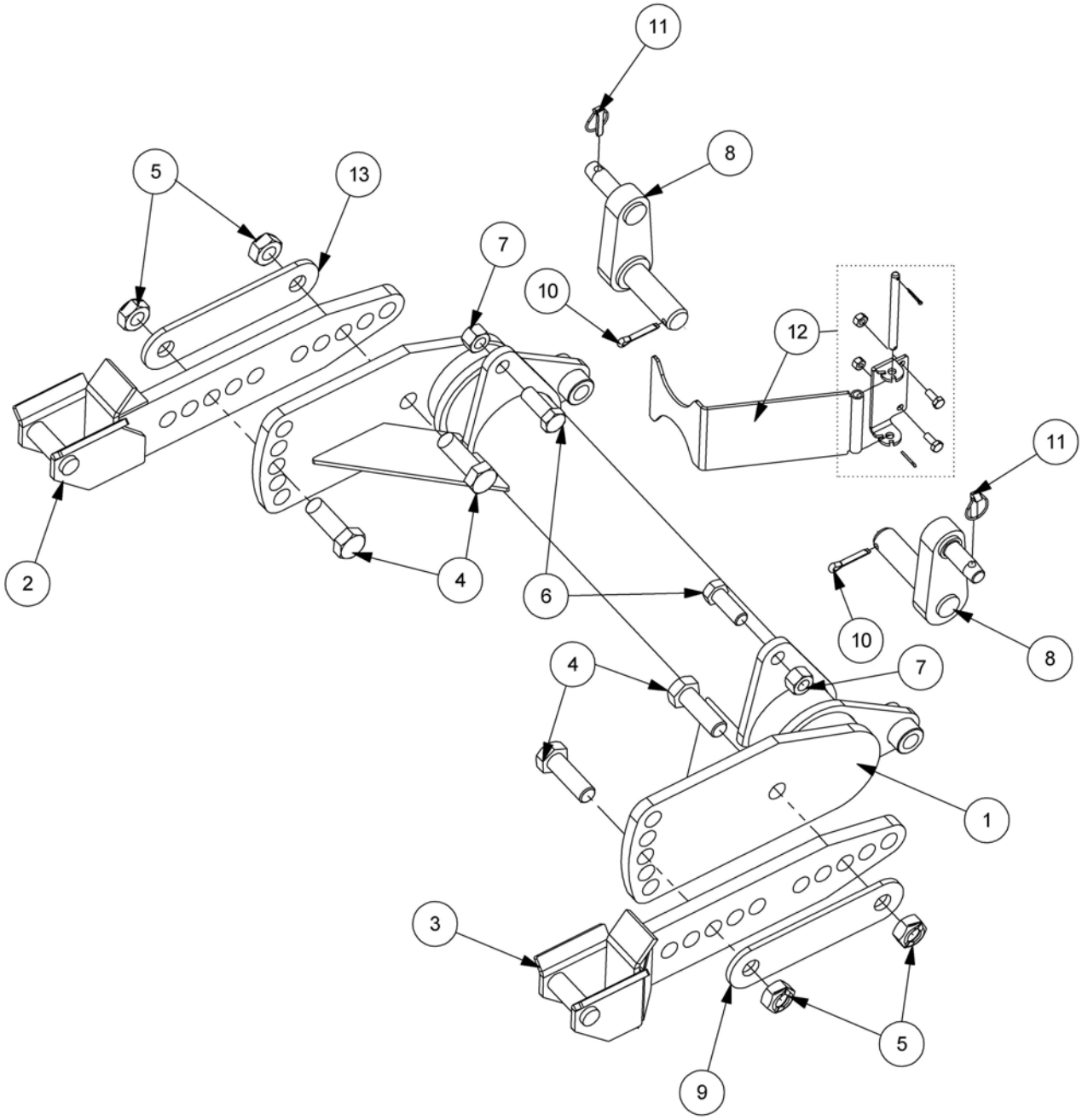

AXLE BRACKET KIT - Standard

REF.	QTY.	PART No.	DESCRIPTION
		7155716	**AXLE BRACKET KIT - Standard**
1	1	21278.01	BRACKET FRAME
2	1	43318.01	HITCH ARM - TYPE 1
3	1	43318.02	HITCH ARM - TYPE 2
4	4	9200035	BOLT
5	4	9100023	BINX NUT
6	2	9213139	BOLT
7	2	9143009	SELF-LOCKING NUT
8	2	43319.02	LIFT LINK
9	2	21358.01	CLAMP PLATE
10	2	9501509	SPLIT PIN
11	2	0431217	LINCH PIN
12	1	21187.01	PTO SUPPORT BRACKET KIT - *Comprising of:*
	1	21184.01	DRIVE SHAFT SUPPORT BRACKET
	1	21186.01	PIN
	1	21183.01	PTO SUPPORT BRACKET
	2	9313055	SETSCREW
	1	9143005	SELF-LOCKING NUT
	1	9143006	SELF-LOCKING NUT
	2	9501255	SPLIT PIN

AXLE BRACKET KIT - Alternative

Module:
7155717

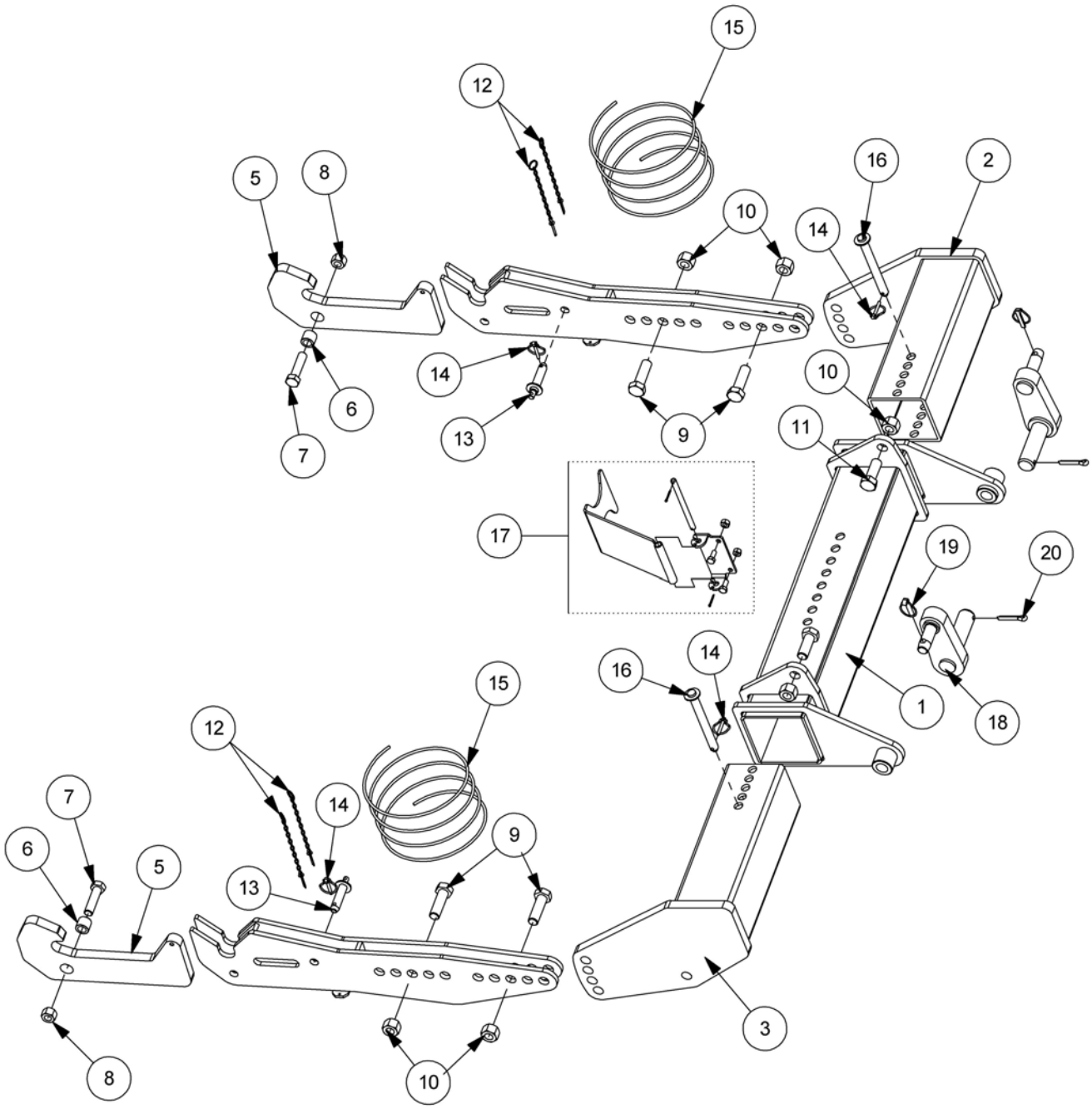

AXLE BRACKET KIT - Alternative

REF.	QTY.	PART No.	DESCRIPTION
		7155717	**AXLE BRACKET KIT - Alternative**
1	1	21289.01	HITCH FRAME
2	1	21292.01	HITCH MOUNT - TYPE 1
3	1	21292.02	HITCH MOUNT - TYPE 2
4	2	21290.01	MOUNTING ARM
5	2	21291.01	LATCH
6	2	21303.01	PIVOT BUSH
7	2	9213168	BOLT
8	2	9143008	SELF-LOCKING NUT
9	4	05.285.02	BOLT
10	6	9143009	SELF-LOCKING NUT
11	2	9213139	BOLT
12	4	03.255.05	CHAIN/RING
13	2	21330.01	SAFETY PIN
14	4	0431204	LINCH PIN
15	2	21331.01	LATCH CORD
16	2	21332.01	BRACKET PIN
17	1	21187.01	PTO SUPPORT BRACKET KIT - *Comprising of:*
	1	21184.01	DRIVE SHAFT SUPPORT BRACKET
	1	21186.01	PIN
	1	21183.01	PTO SUPPORT BRACKET
	2	9313055	SETSCREW
	1	9143005	SELF-LOCKING NUT
	1	9143006	SELF-LOCKING NUT
	2	9501255	SPLIT PIN
18	2	43319.02	LIFT LINK
19	2	0431217	LINCH PIN
20	2	9501509	SPLIT PIN

MAIN FRAME ASSEMBLY

Module:
7155700 – L/H Build
7155701 – R/H Build

Illustrated in Left Hand build

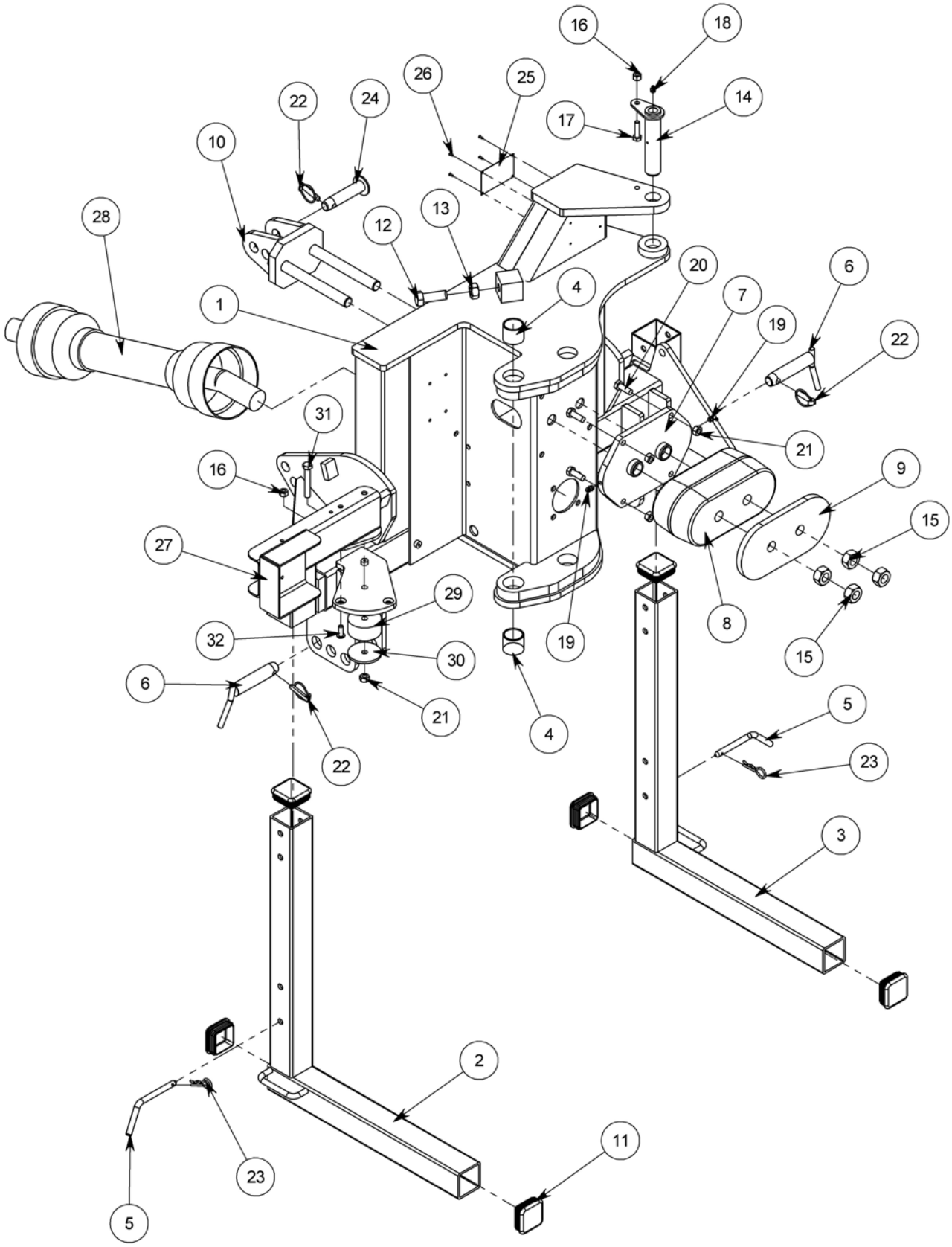

MAIN FRAME ASSEMBLY

REF.	QTY.	PART No.	DESCRIPTION
		7155700	**MAIN FRAME ASSEMBLY - L/H Build**
		7155701	**MAIN FRAME ASSEMBLY - R/H Build**
1	1	21272.01	MAIN FRAME - L/H Build
	1	21272.02	MAIN FRAME - R/H *(not illustrated)*
2	1	45293.03	STAND LEG - L/H
3	1	45293.04	STAND LEG - R/H
4	2	30.207.68	PLASTIC BUSH
5	2	45297.01	LEG PIN
6	2	41559.01	LINKAGE PIN - CAT 2
7	1	21277.01	WEAR PLATE
8	1	7560141	RUBBER SPRING
9	1	7560130	REACTION PLATE
10	1	7560398	TOP HITCH BRACKET
11	6	45210.01	PLASTIC PLUG
12	1	9313118	SETSCREW
13	1	9113008	NUT
14	1	45202.08	PIN
15	4	9113009	NUT
16	2	9143005	SELF-LOCKING NUT
17	1	9213085	BOLT
18	1	0901121	GREASE NIPPLE - STRAIGHT
19	2	0901124	GREASE NIPPLE - 67°
20	4	9313076	SETSCREW
21	5	9143006	SELF-LOCKING NUT
22	3	0431217	LINCH PIN
23	2	0431105	SPRING COTTER
24	1	7560144	TOP LINK PIN
25	1	1335246	SERIAL No. PLATE
26	4	7103230	POP RIVET
27	1	21283.01	LAMP SUPPORT - L/H Build
	1	21283.02	LAMP SUPPORT - R/H Build *(not illustrated)*
28	1	7550346	DRIVE SHAFT
29	1	21372.01	MOUNTING RUBBER
30	1	21346.01	CLAMP PLATE
31	1	9213166	BOLT
32	1	9300154	SOCKET HEAD SCREW

PILLAR ASSEMBLY

Modules:
7155704 – L/H Build
7155705 – R/H Build

Illustrated in Left Hand build

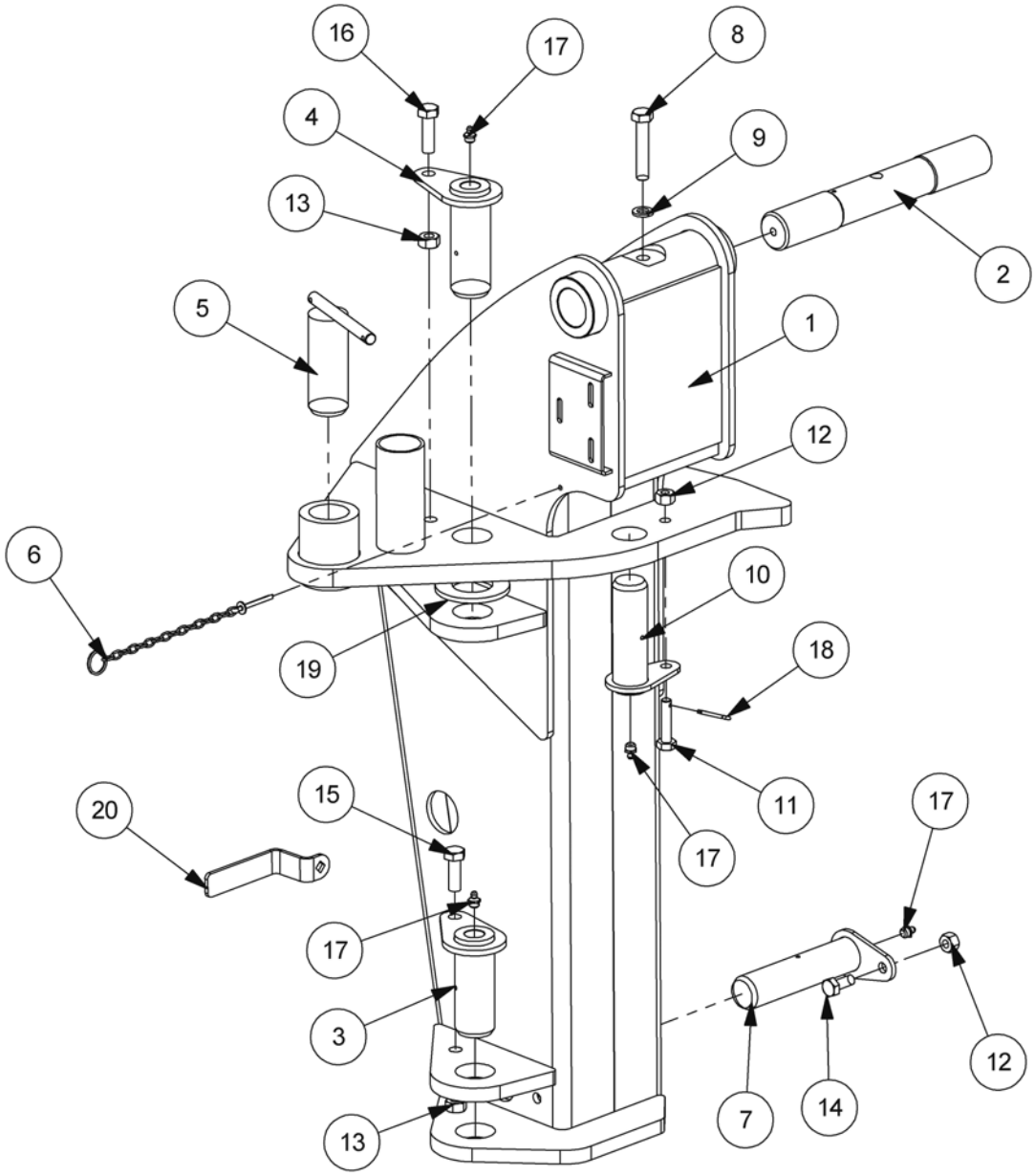

PILLAR ASSEMBLY

REF.	QTY.	PART No.	DESCRIPTION
		7155704	**PILLAR ASSEMBLY - L/H Build**
		7155705	**PILLAR ASSEMBLY - R/H Build**
1	1	21273.01	PILLAR - L/H Build
	1	21273.02	PILLAR - R/H Build *(not illustrated)*
2	1	45264.01	MAIN PIVOT PIN
3	1	45271.01	SLEW PIVOT PIN
4	1	45271.02	SLEW PIVOT PIN - UPPER
5	1	43323.01	SLEW LOCK PIN
6	1	03.255.05	CHAIN/RING ASSEMBLY
7	1	45202.05	SLEW BASE PIN
8	1	9213136	BOLT
9	1	9100206	SPRING WASHER
10	1	45202.04	PIN - SLEW ROD
11	1	42269.07	SPECIAL BOLT
12	2	9143005	SELF-LOCKING NUT
13	2	9143006	SELF-LOCKING NUT
14	1	9313055	SETSCREW
15	1	9313076	SETSCREW
16	1	9313086	SETSCREW
17	4	0901121	GREASE NIPPLE - STRAIGHT
18	1	9501255	SPLIT PIN
19	1	45298.01	THRUST WASHER
20	1	21193.01	TAP HANDLE

ROCKER ASSEMBLY - Standard

Module:
7452710

Illustrated in Left Hand Build

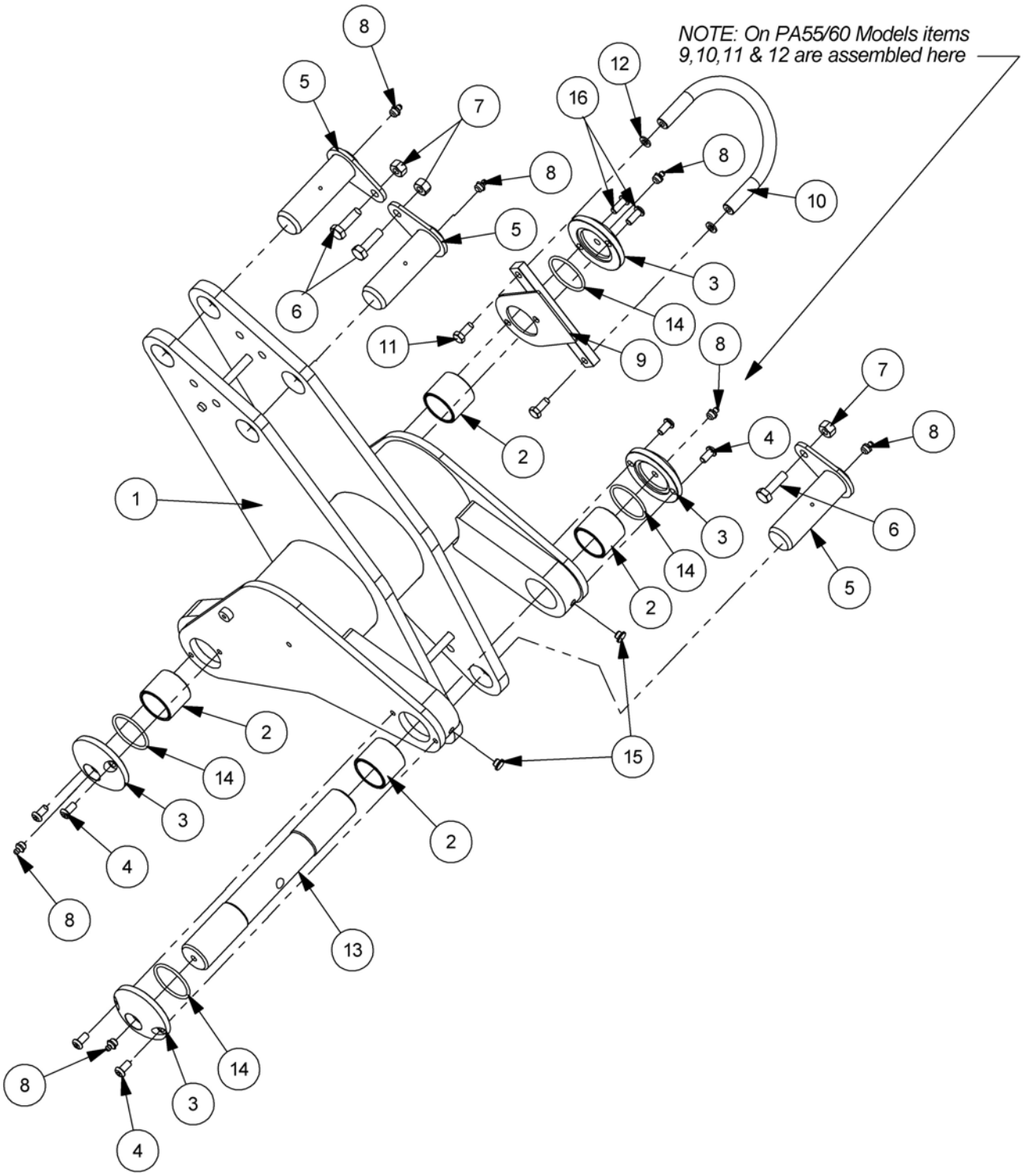

ROCKER ASSEMBLY – Standard

REF.	QTY.	PART No.	DESCRIPTION
		7452710	**ROCKER ASSEMBLY - STANDARD**
1	1	45059.02	ROCKER
2	4	08.297.02	BUSH
3	4	45266.01	PIN CAP
4	6	9300159	BOLT - BUTTON / SOCKET HEAD
5	3	45202.04	SLEW ROD PIN
6	3	9313075	SETSCREW
7	3	9143005	SELF-LOCKING NUT
8	7	0901121	GREASE NIPPLE - Straight
9	1	43048.06	RETAINING BRACKET
10	1	43048.05	HOOK
11	2	9313044	SETSCREW
12	2	9100204	SPRING WASHER
13	1	45264.01	MAIN PIVOT PIN
14	4	8600303	'O' RING 225
15	2	42964.02	PLASTIC PLUG
16	2	9300161	SOCKET BUTTON SCREW

ROCKER ASSEMBLY – EDS Models

Module:
7452711

Illustrated in Left Hand Build

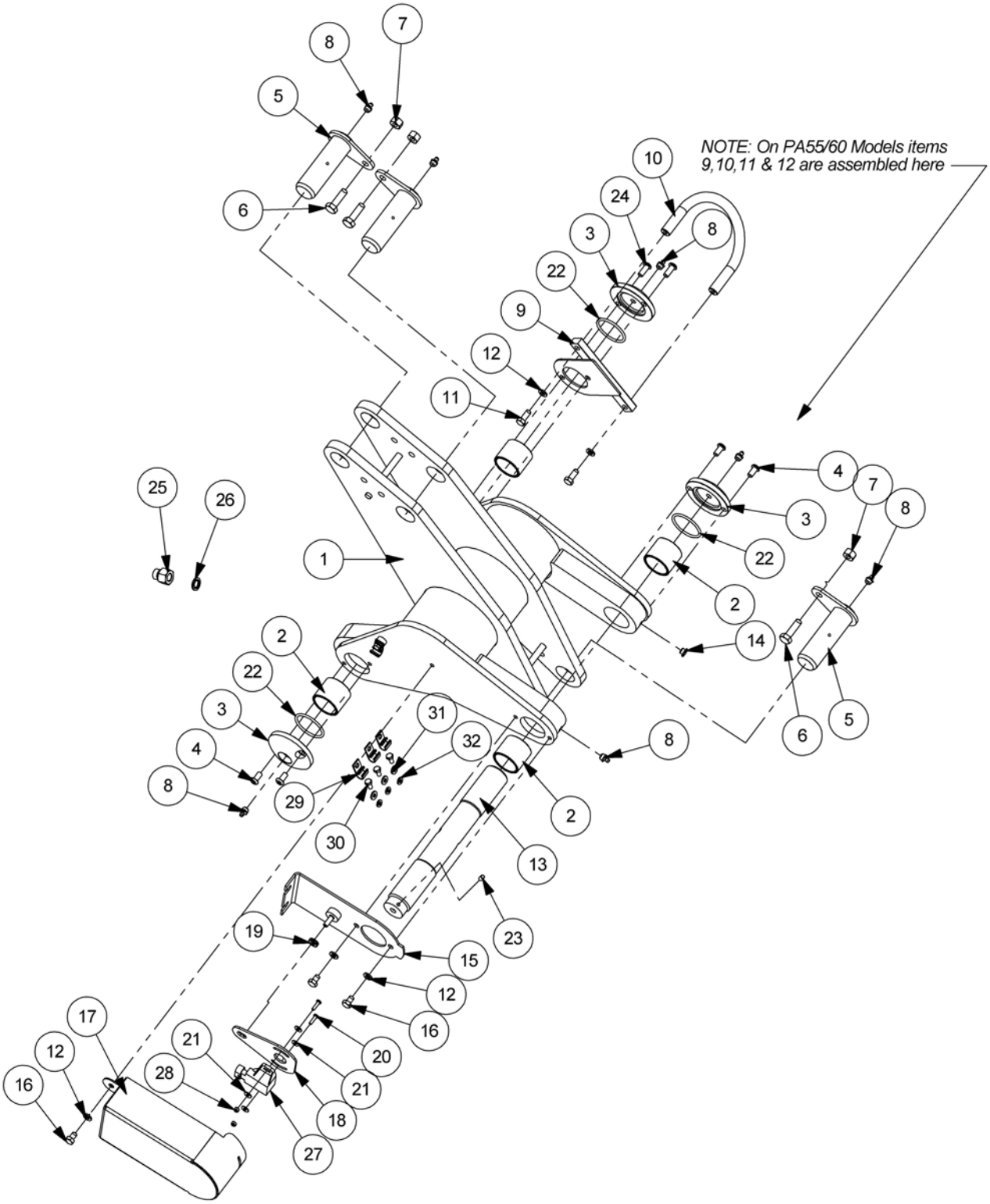

ROCKER ASSEMBLY – EDS Models

REF.	QTY.	PART No.	DESCRIPTION
		7452711	**ROCKER ASSEMBLY - EDS Models**
1	1	45059.02	ROCKER
2	4	08.297.02	BUSH
3	3	45266.01	PIN CAP
4	4	9300159	BUTTON HEAD SOCKET SCREW
5	3	45202.04	PIN
6	3	9313075	SETSCREW
7	3	9143005	SELF-LOCKING NUT
8	7	0901121	GREASE NIPPLE
9	1	43048.06	RETAINING BRACKET
10	1	43048.05	HOOK
11	2	9313044	SETSCREW
12	5	9100204	SPRING WASHER
13	1	45264.02	MAIN PIVOT PIN - EDS
14	1	42964.02	PLASTIC PLUG
15	1	45425.05	LOCATION PLATE
16	3	9313024	SETSCREW
17	1	45425.03	COVER
18	1	45425.06	SENSOR BRACKET
19	1	43356.01	GROMMET
20	2	9300162	POSI PANHEAD SCREW
21	4	9100102	FLAT WASHER
22	3	8600303	O RING
23	1	9363023	GRUB SCREW
24	2	9300161	SOCKET BUTTON SCREW
25	1	8103005	ADAPTOR
26	1	8650102	BONDED SEAL
27	1	8402235	REACH SENSOR
28	2	05.948.33	SELF-LOCKING NUT
29	4	21151.01	D CLIP
30	4	9313023	SETSCREW
31	4	9100103	FLAT WASHER
32	4	9100203	SPRING WASHER

MAIN ARM ASSEMBLY

Modules:
7155706 – PA55 L/H Build
7155707 – PA55 R/H Build
7160706 – PA60 L/H Build
7160707 – PA60 R/H Build

PA55 L/H Build illustrated

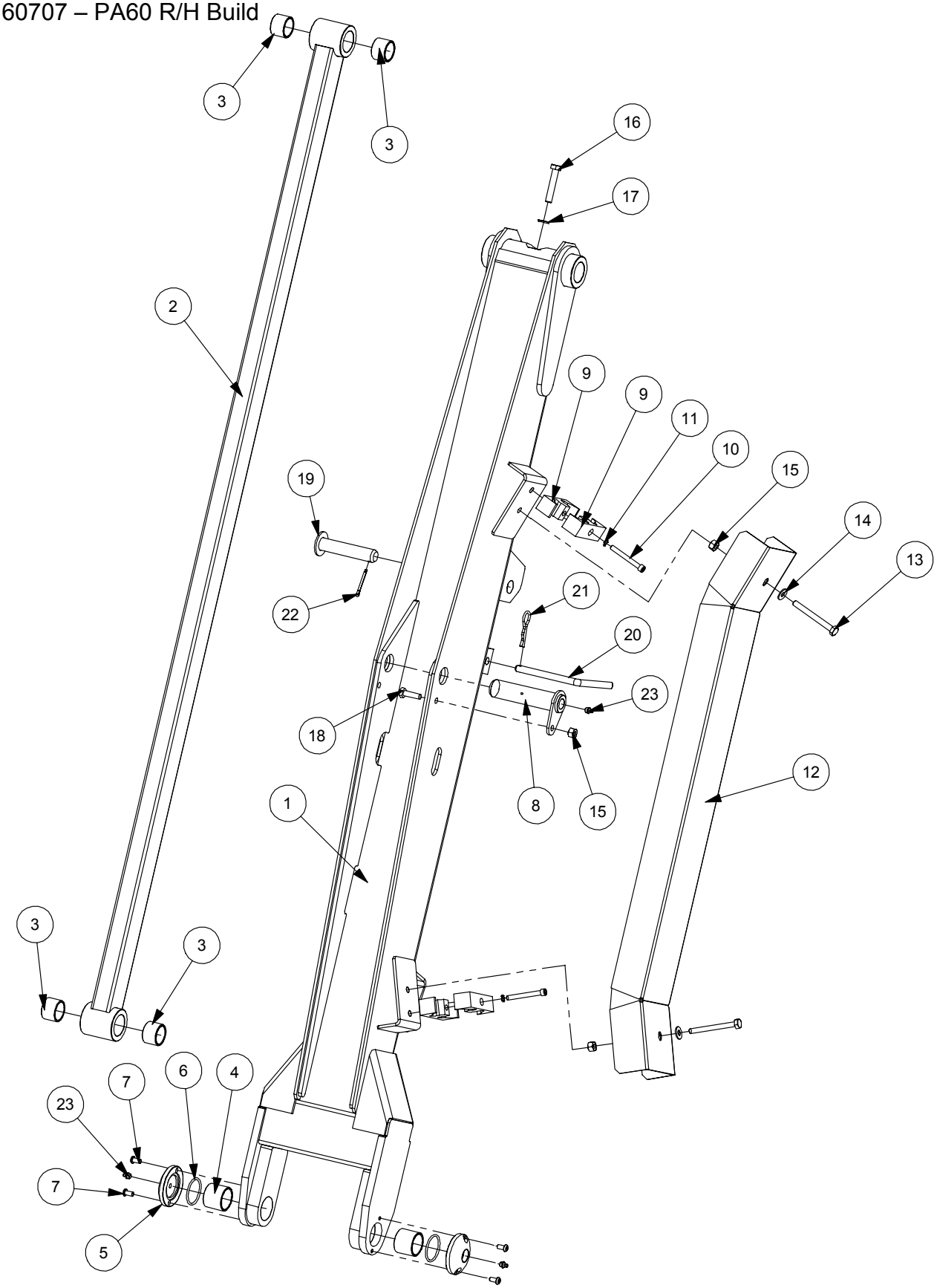

MAIN ARM ASSEMBLY

REF.	QTY.	PART No.	DESCRIPTION
		7155706	**MAIN ARM ASSEMBLY - PA55 L/H Build**
		7155707	**MAIN ARM ASSEMBLY - PA55 R/H Build**
		7160706	**MAIN ARM ASSEMBLY - PA60 L/H Build**
		7160707	**MAIN ARM ASSEMBLY - PA60 R/H Build**
1	1	21279.01	MAIN ARM - PA55 L/H Build
	1	21279.02	MAIN ARM - PA55 R/H Build
	1	21279.03	MAIN ARM - PA60 L/H Build
	1	21279.04	MAIN ARM - PA60 R/H Build
2	1	21280.01	TENSION LINK - PA55 Models
	1	21280.02	TENSION LINK - PA60 Models
3	4	08.297.05	BUSH
4	2	08.297.02	BUSH
5	2	45266.01	PIN CAP
6	2	8600303	O RING
7	4	9300159	BUTTON HEADED SOCKET SCREW
8	1	45202.07	PIN - LOWER RAM BASE
9	4	45630.01	HOSE CLAMP
10	2	9243154	CAPSCREW
11	2	9100404	SHAKEPROOF WASHER
12	1	41665.21	HOSE COVER - PA55 Models
	1	41665.22	HOSE COVER - PA60 Models
13	2	9213205	BOLT
14	2	9100105	FLAT WASHER
15	3	9143005	SELF-LOCKING NUT
16	1	9213136	BOLT
17	1	9100206	SPRING WASHER
18	1	9313075	SETSCREW
19	1	43023.01	PIN - TRANSPORT PROP
20	1	43074.01	LOCK PIN - TRANSPORT PROP
21	1	0431105	SPRING COTTER
22	1	9501406	SPLIT PIN
23	3	0901121	GREASE NIPPLE

DIPPER ARM ASSEMBLY – Std.

Modules:

Illustrated in Left-Hand Build

7155708 – PA55 Standard L/H Build
7155709 – PA55 Standard R/H Build
7160708 – PA60 Standard L/H Build
7160709 – PA60 Standard R/H Build

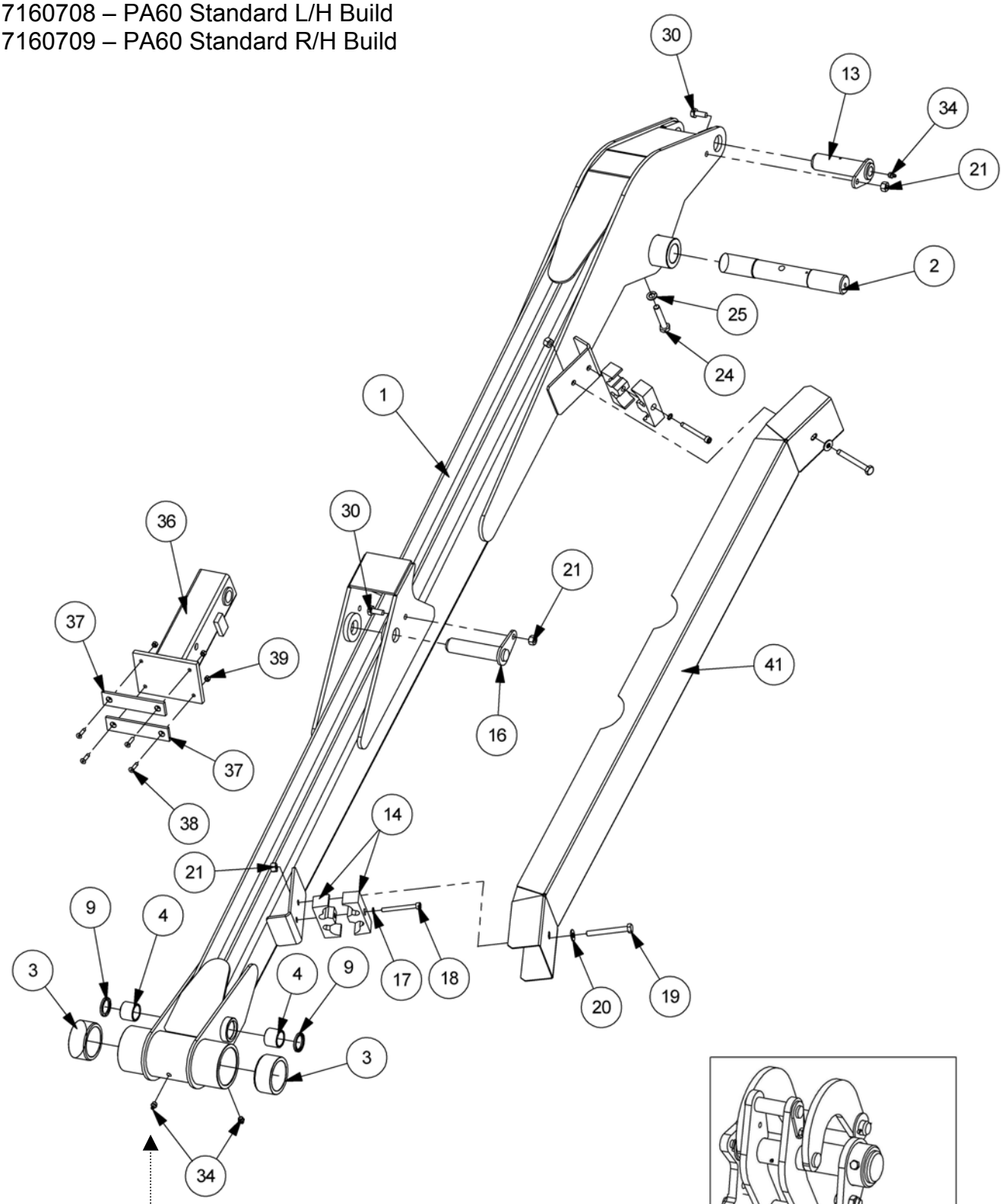

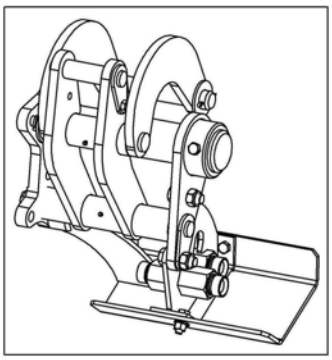

See Head Angling Mechanism page
for exploded view of this component

DIPPER ARM ASSEMBLY – Std.

REF.	QTY.	PART No.	DESCRIPTION
		7155708	**DIPPER ARM ASSEMBLY - PA55 Std. L/H build**
		7155709	**DIPPER ARM ASSEMBLY - PA55 Std. R/H build**
		7160708	**DIPPER ARM ASSEMBLY - PA60 Std. L/H build**
		7160709	**DIPPER ARM ASSEMBLY - PA60 Std. R/H build**
1	1	21281.01	DIPPER ARM - PA55 Standard L/H build
	1	21281.02	DIPPER ARM - PA55 Standard R/H build
	1	21281.03	DIPPER ARM - PA60 Standard L/H build
	1	21281.04	DIPPER ARM - PA60 Standard R/H build
2	1	45264.01	MAIN PIVOT PIN
3	2	7136035	PLASTIC BUSH
4	6	08.297.04	BUSH
5	1	21263.01	PIVOT TUBE
6	1	42648.01	JAW PLATE
7	1	42646.03	RADIUS ARM - TYPE 1
8	1	42646.04	RADIUS ARM - TYPE 2
9	6	8629218	LIP SEAL
10	1	42647.02	SLAVE LINK
11	1	42684.01	PIN - SLAVE LINK
12	1	21261.02	JUNCTION BRACKET
13	1	45202.01	PIN
14	4	45630.01	HOSE CLAMP
15	1	42684.05	PIN
16	1	42684.07	PIN
17	2	9100404	SHAKEPROOF WASHER
18	2	9243154	CAPSCREW
19	2	9213185	BOLT
20	4	9100105	FLAT WASHER
21	8	9143005	SELF-LOCKING NUT
22	1	0423556	SPRING DOWEL
23	1	9213205	BOLT
24	1	9213136	BOLT
25	1	9100206	SPRING WASHER
26	1	9200025	BOLT
27	1	9200028	BOLT
28	3	9100028	SELF-LOCKING NUT
29	1	9313075	SETSCREW
30	2	9313055	SETSCREW
31	2	05.281.18	FLAT WASHER
32	2	9501406	SPLIT PIN
33	1	9501507	SPLIT PIN
34	5	0901121	GREASE NIPPLE
35	1	21262.01	HOSE TRAY
36	1	43021.08	TRANSPORT PROP - PA55 Models
	1	43021.01	TRANSPORT PROP - PA60 Models
37	2	43091.03	PAD - TRANSPORT PROP
38	4	9353053	CAPSCREW
39	4	9143003	SELF-LOCKING NUT
40	2	9313065	SETSCREW
41	1	41665.28	HOSE COVER - PA55 Models
	1	41665.25	HOSE COVER - PA60 Models

Note: See Head Angling Mechanism page for expoloded view of that component.

MIDCUT DIPPER ARM ASSEMBLY

Modules:
7155754 – L/H Build
7155755 – R/H Build

Illustrated in Left-Hand Build

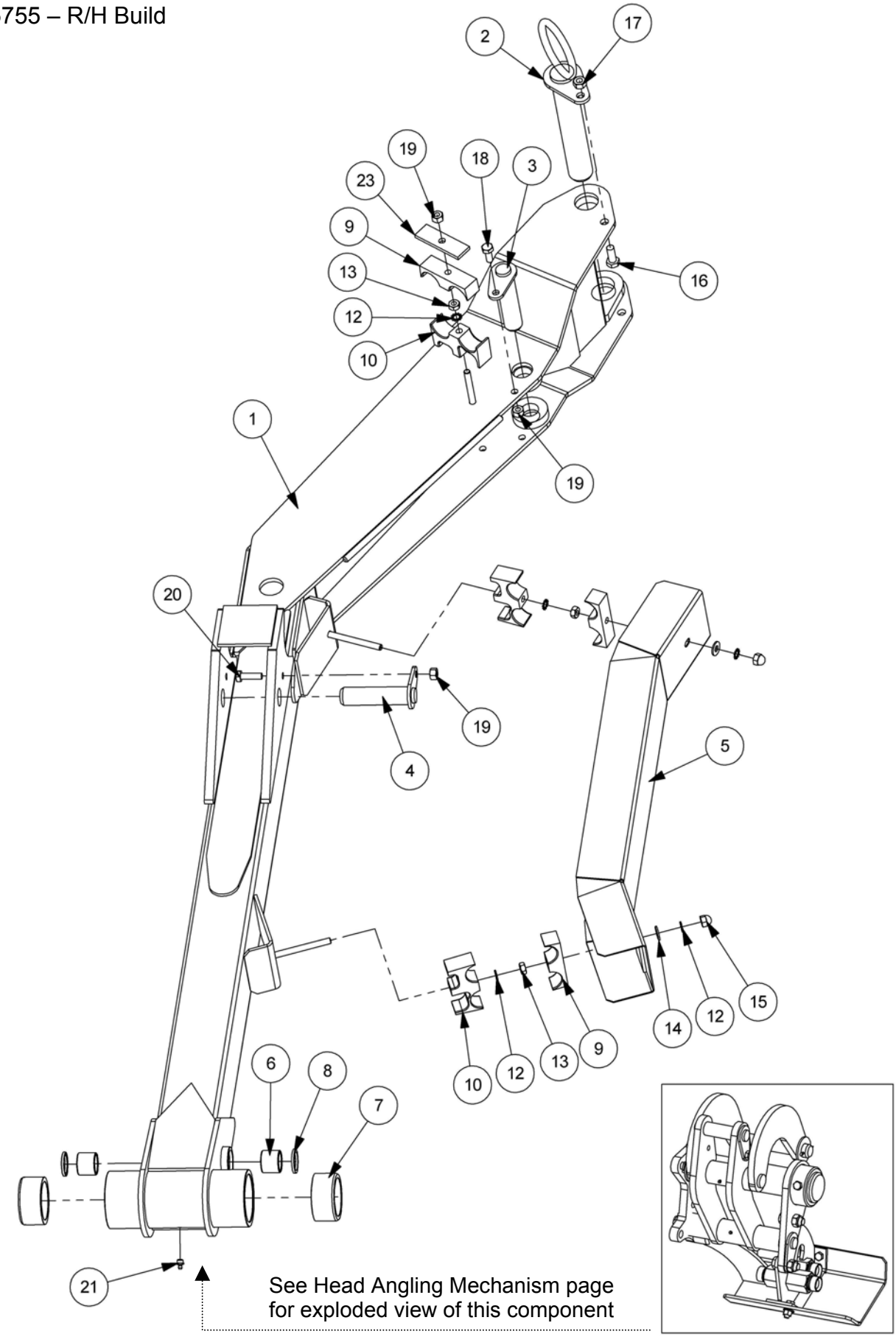

See Head Angling Mechanism page for exploded view of this component

MIDCUT DIPPER ARM ASSEMBLY

REF.	QTY.	PART No.	DESCRIPTION
		7155754	**MIDCUT DIPPER ARM ASSEMBLY - L/H Build**
		7155755	**MIDCUT DIPPER ARM ASSEMBLY - R/H Build**
1	1	45602.01	MIDCUT DIPPER - L/H Build
	1	45602.02	MIDCUT DIPPER - R/H Build *(not illustrated)*
2	1	45609.01	PIN - MIDCUT FOLD
3	1	42684.03	PIN - FOLD RAM ROD END
4	1	42684.05	PIN
5	1	41665.19	HOSE COVER
6	2	08.297.04	BUSH
7	2	7136035	PLASTIC BUSH
8	2	8629218	LIP SEAL
9	3	06.430.17	HOSE CLAMP - UPPER
10	3	06.430.18	HOSE CLAMP - LOWER
11	2	42198.02	STUD
12	5	9100405	SHAKEPROOF WASHER
13	3	9113005	NUT
14	2	9100105	FLAT WASHER
15	2	9100025	DOME NUT
16	1	9313066	SETSCREW
17	1	9143006	SELF-LOCKING NUT
18	1	9313055	SETSCREW
19	3	9143005	SELF-LOCKING NUT
20	1	9313075	SETSCREW
21	1	0901121	GREASE NIPPLE
22	1	9213165	BOLT
23	1	06.418.05	CLAMP PLATE

MIDCUT FORWARD EXTENSION

Modules:
7155752 – L/H Build
7155753 – R/H Build

Illustrated in Left-Hand Build

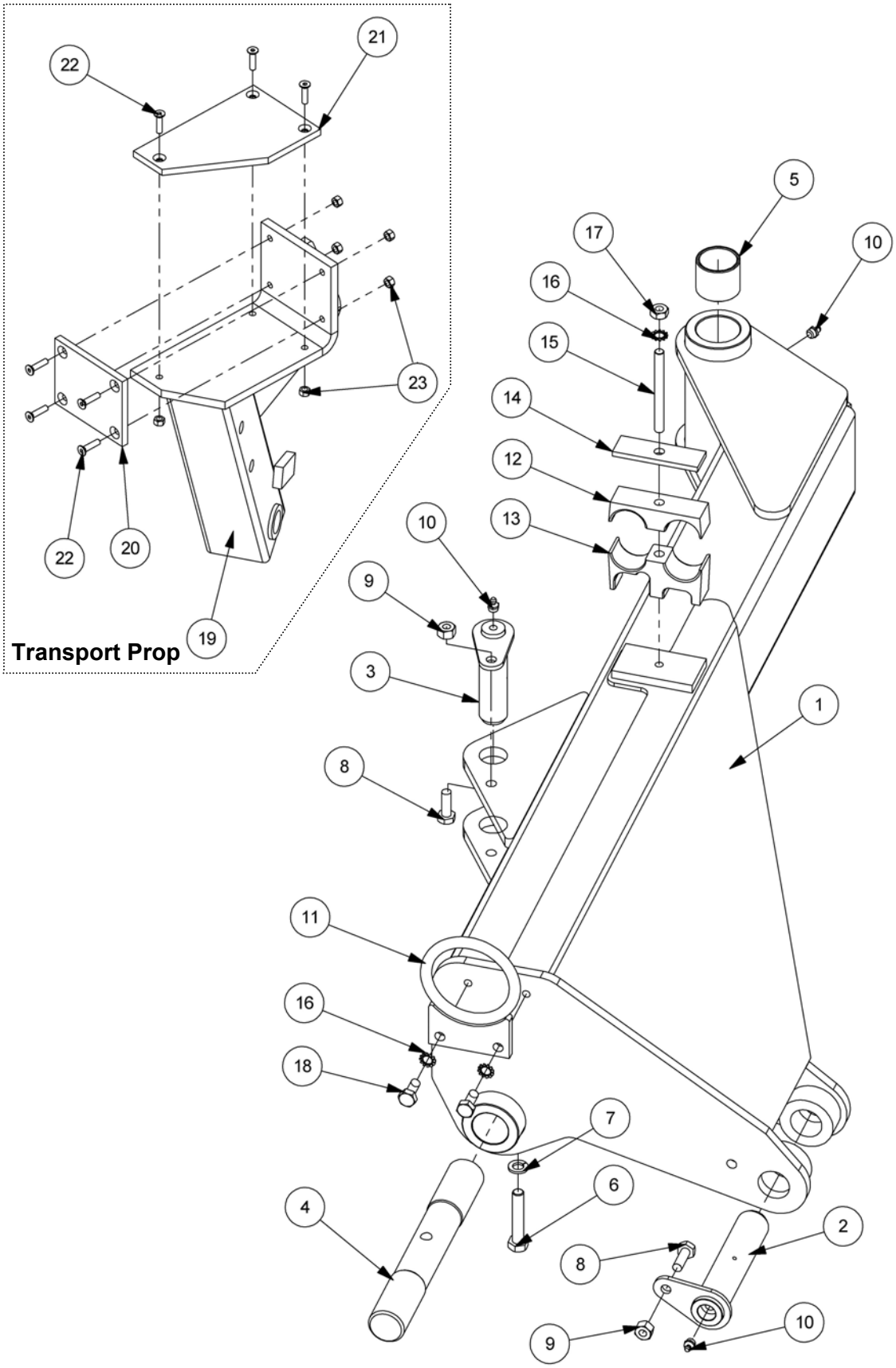

MIDCUT FORWARD EXTENSION

REF.	QTY.	PART No.	DESCRIPTION
		7155752	**MIDCUT FORWARD EXTENSION - L/H Build**
		7155753	**MIDCUT FORWARD EXTENSION - R/H Build**
1	1	21364.01	FORWARD EXTENSION - L/H Build
	1	21364.02	FORWARD EXTENSION - R/H Build *(not illustrated)*
2	1	45202.08	PIN
3	1	42684.02	PIN - RAM BASE
4	1	45264.01	MAIN PIVOT PIN
5	2	08.297.02	BUSH
6	1	9213136	BOLT
7	1	9100206	SPRING WASHER
8	2	9313065	SETSCREW
9	2	9143005	SELF-LOCKING NUT
10	3	0901121	GREASE NIPPLE
11	1	45974.01	HOSE LOOP
12	1	06.430.17	HOSE CLAMP - UPPER
13	1	06.430.18	HOSE CLAMP - LOWER
14	1	06.418.05	CLAMP PLATE
15	1	04.282.69	STUD
16	3	9100405	SHAKEPROOF WASHER
17	1	9113005	NUT
18	2	9313055	SETSCREW
19	1	43021.09	TRANSPORT CRADLE - L/H Build
	1	43021.10	TRANSPORT CRADLE - R/H Build *(not illustrated)*
20	1	43091.02	SIDE PAD
21	1	43091.01	MAIN PAD
22	7	9353053	CAPSCREW
23	7	9143003	SELF-LOCKING NUT

HEAD ANGLING MECHANISM

Modules:
Component part of all Dipper Arm modules.

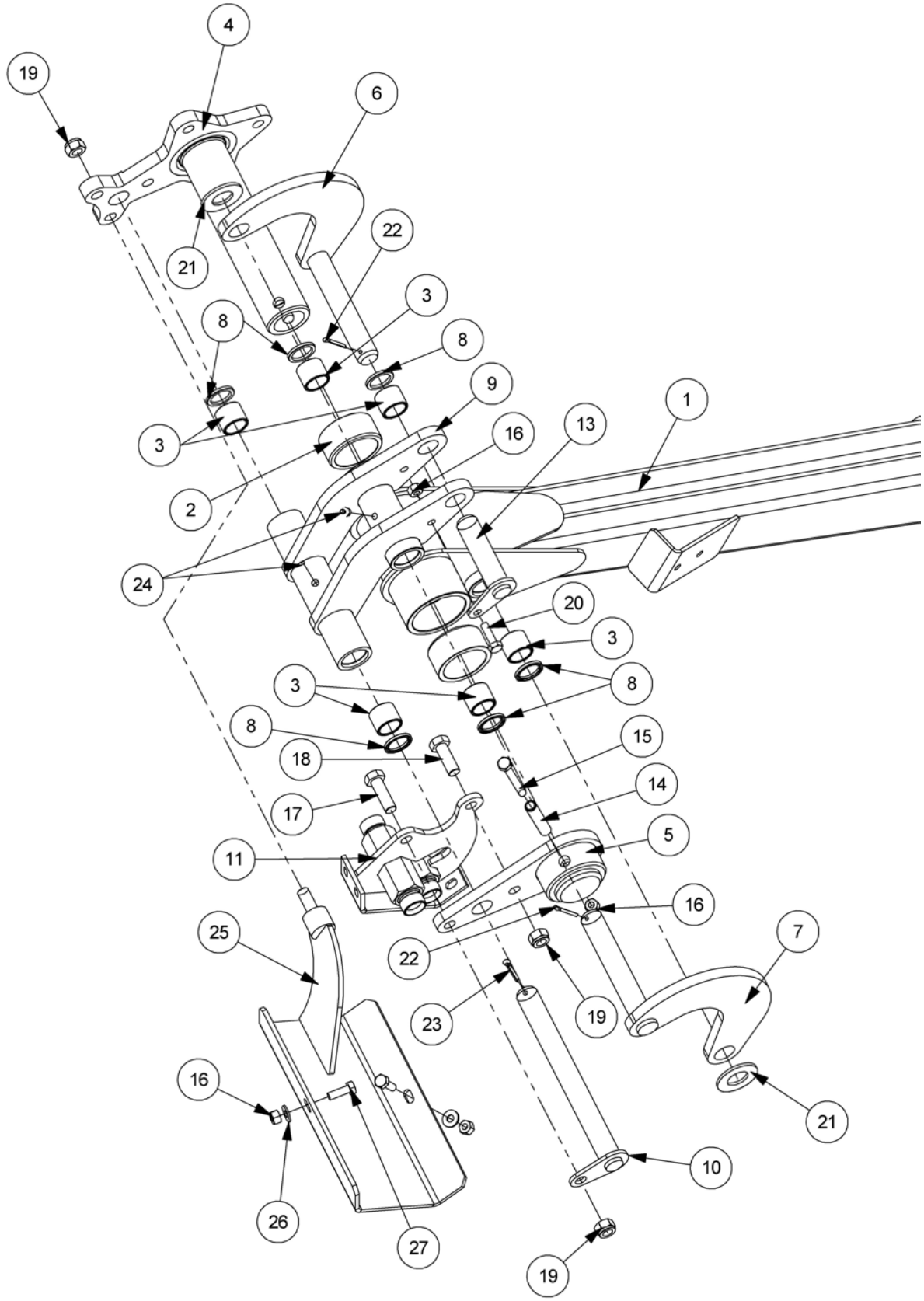

HEAD ANGLING MECHANISM

REF.	QTY.	PART No.	DESCRIPTION
			HEAD ANGLING MECHANISM - All Models
1	1	All builds	DIPPER ARM
2	2	7136035	PLASTIC BUSH
3	6	08.297.04	BUSH
4	1	21263.01	PIVOT TUBE
5	1	42648.01	JAW PLATE
6	1	42646.03	RADIUS ARM - TYPE 1
7	1	42646.04	RADIUS ARM - TYPE 2
8	6	8629218	LIP SEAL
9	1	42647.02	SLAVE LINK
10	1	42684.01	PIN - SLAVE LINK
11	1	21261.02	JUNCTION BRACKET
12	1	45202.01	PIN
13	1	42684.05	PIN
14	1	0423556	SPRING DOWEL
15	1	9213205	BOLT
16	4	9143005	SELF-LOCKING NUT
17	1	9200025	BOLT
18	1	9200028	BOLT
19	3	9100028	SELF-LOCKING NUT
20	1	9313075	SETSCREW
21	2	05.281.18	FLAT WASHER
22	2	9501406	SPLIT PIN
23	1	9501507	SPLIT PIN
24	2	0901121	GREASE NIPPLE
25	1	21262.01	HOSE TRAY
26	2	9100105	FLAT WASHER
27	2	9313065	SETSCREW

HYDRAULIC TANK ASSEMBLY

Modules:
7155702 – L/H Build
7155703 – R/H Build

TANK FITTINGS
See following page for additional fittings that are specific to the various models

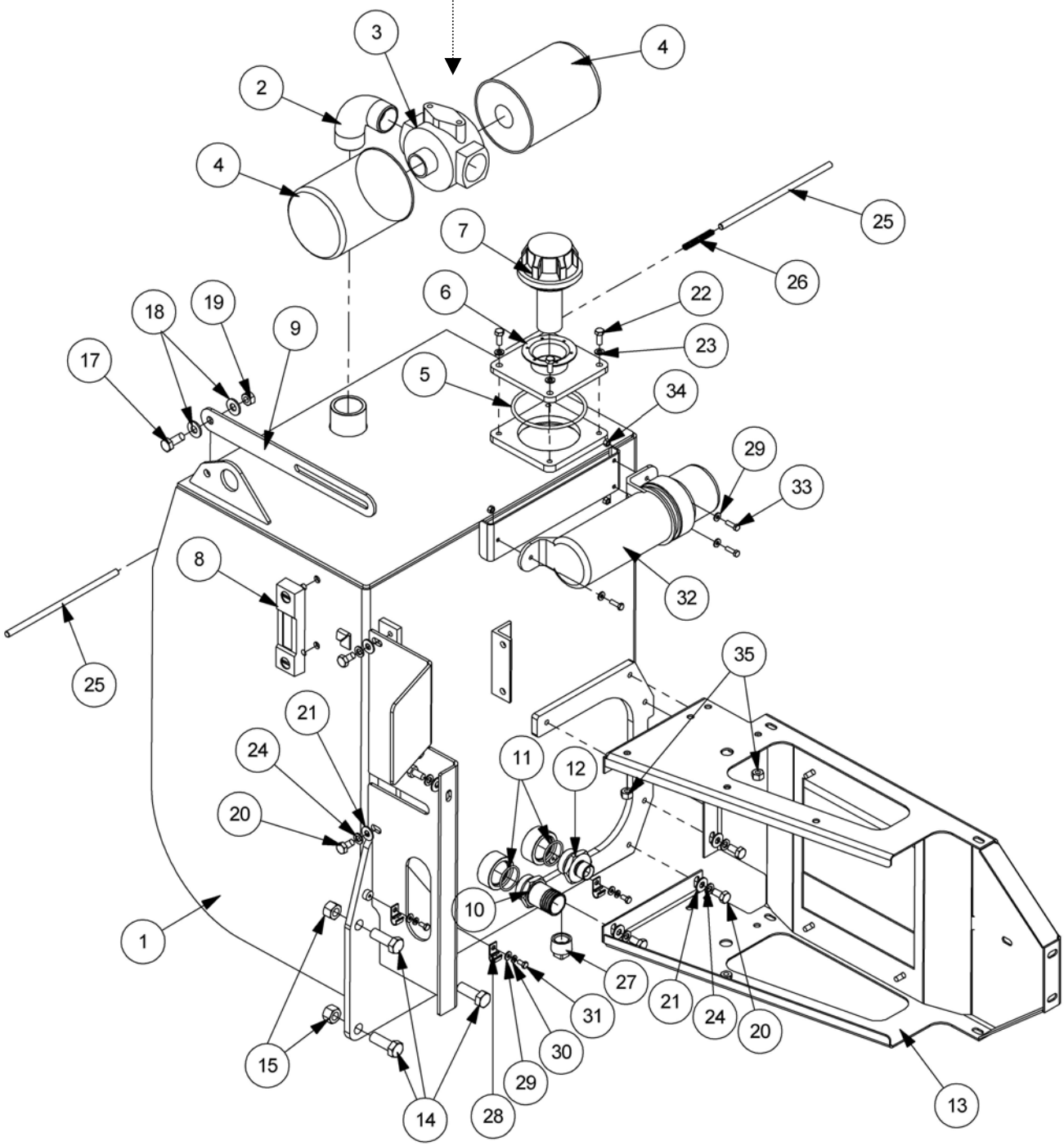

HYDRAULIC TANK ASSEMBLY

REF.	QTY.	PART No.	DESCRIPTION
		7155702	**HYDRAULIC TANK ASSEMBLY - L/H Build**
		7155703	**HYDRAULIC TANK ASSEMBLY - R/H Build**
1	1	21306.01	TANK - L/H Build
		21306.02	TANK - R/H Build *(not illustrated)*
2	1	8581292	ADAPTOR ELBOW - 90°
3	1	8401060	RETURN FILTER HEAD
4	2	8401041	FILTER ELEMENT
5	1	8600151	O RING
6	1	43175.01	COVER PLATE
7	1	8401074	FILLER BREATHER PRESS
8	1	8401048	LEVEL GAUGE
9	1	21311.01	STAY - TANK COVER
10	1	8581260	ADAPTOR
11	2	8700784	O RING
12	1	T5342	ADAPTOR
13	1	21305.01	COVER MOUNT
14	3	9313097	SETSCREW
15	3	9143007	SELF-LOCKING NUT
16	1	21314.01	SHIELD PLATE - L/H Build
		21314.02	SHIELD PLATE - R/H Build *(not illustrated)*
17	1	9313066	SETSCREW
18	2	9100106	FLAT WASHER
19	1	9143006	SELF-LOCKING NUT
20	9	9313045	SETSCREW
21	9	9100105	FLAT WASHER
22	4	9313044	SETSCREW
23	4	9100204	SPRING WASHER
24	9	9100205	SPRING WASHER
25	2	21325.01	PIVOT ROD - TANK COVER
26	1	21326.01	COMPRESSION SPRING
27	1	8581203	TAPER PLUG
28	3	21151.01	D CLIP
29	6	9100103	FLAT WASHER
30	3	9100203	SPRING WASHER
31	3	9313023	SETSCREW
32	1	46505.01	LITERATURE HOLDER
33	3	9313043	SETSCREW
34	3	9113003	NUT
35	3	9143005	SELF-LOCKING NUT

See following page for additional Tank Fittings for specific models

HYDRAULIC TANK FITTINGS

Modules: *Refer opposite for details*
7155726
7155727
7155729

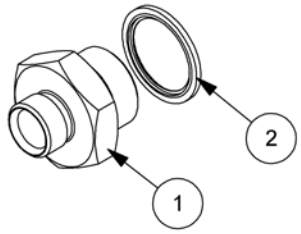

(A) 7155726 - Tank Fittings

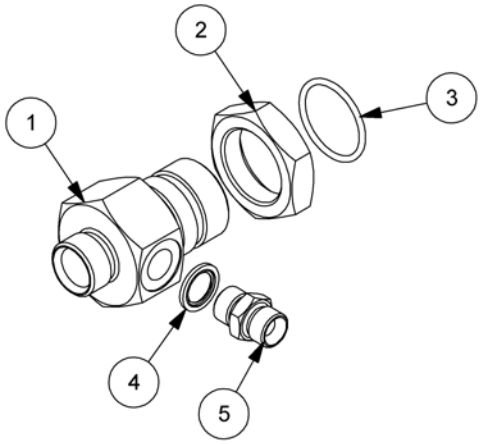

(B) 7155727 - Tank Fittings

(C) 7155729 - Tank Fittings

HYDRAULIC TANK FITTINGS

REF.	QTY.	PART No.	DESCRIPTION
Cable Ti models with Cable Rotor Control Valve			
A		**7155726**	
1	1	8581291	ADAPTOR
2	1	8650224	BONDED SEAL
Cable Si models with Rotor Reverse Valve & Electric Ti models with Cable RCV			
B		**7155727**	
1	1	8581425	ADAPTOR
2	1	8581422	ADAPTOR BACKNUT
3	1	8600302	O RING
4	1	8650104	BONDED SEAL
5	1	8581110	ADAPTOR
Electric, Proportional & EDS models with Electric RCV			
C		**7155729**	
1	1	8581291	ADAPTOR
2	1	8650224	BONDED SEAL
3	1	43177.42	LOOM - THERMAL CUT OUT
4	1	8402236	THERMAL CUTOUT
5	1	21322.01	CLAMP PLATE
6	2	9313035	SETSCREW
7	2	9100205	SPRING WASHER

SI PUMP & GEARBOX ASSEMBLY

Modules:
7155733 – L/H Build
7155737 – R/H Build

Illustrated in Left Hand Build

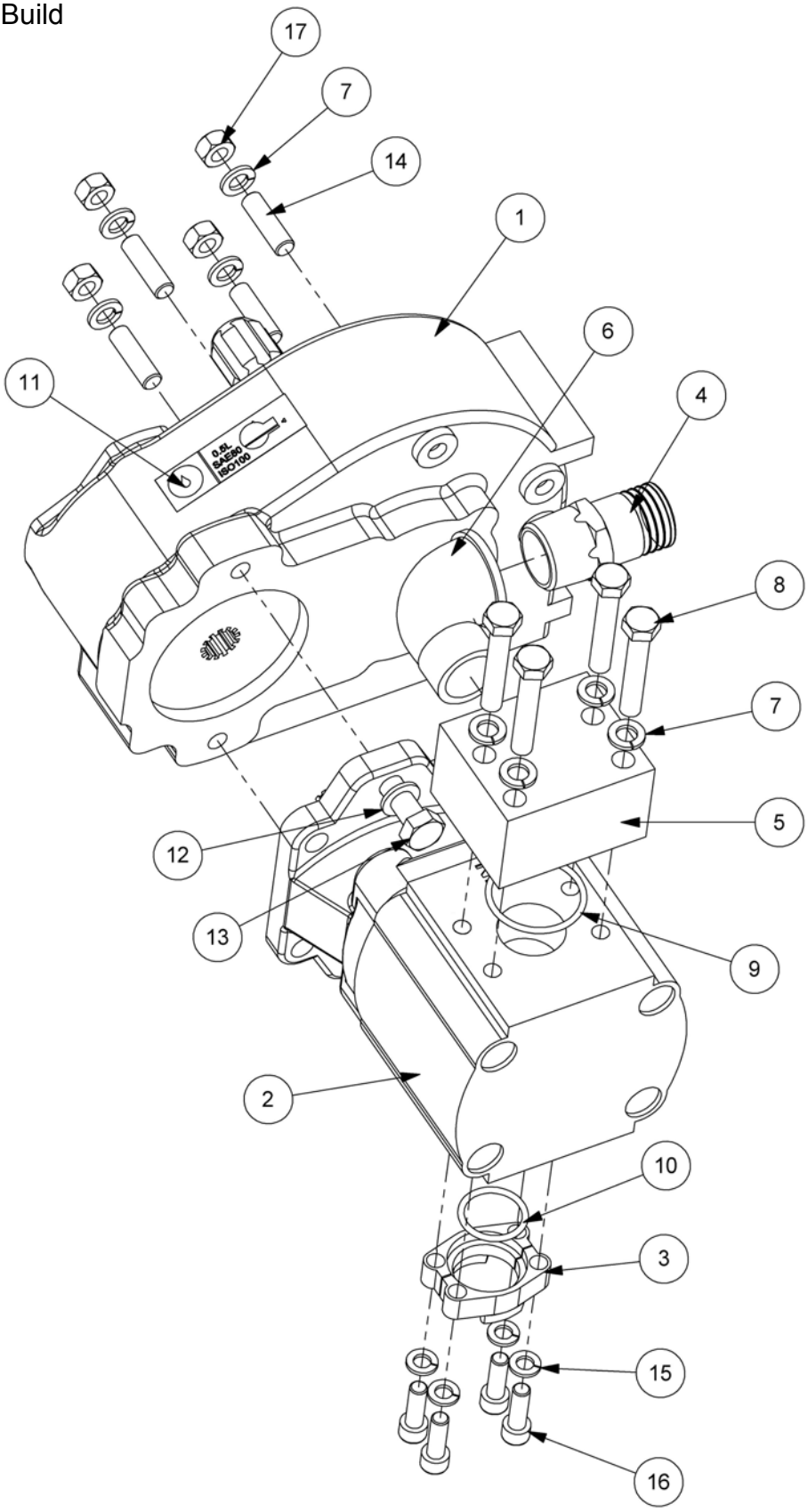

SI PUMP & GEARBOX ASSEMBLY

REF.	QTY.	PART No.	DESCRIPTION
		7155733	**SI PUMP & GEARBOX ASSEMBLY - L/H Build**
		7155734	**SI PUMP & GEARBOX ASSEMBLY - R/H Build**
1	1	42693.10	GEAR BOX - CAST IRON
2	1	8201719	PUMP
3	1	01.697.03	SPLIT FLANGE
4	1	8581367	ADAPTOR
5	1	8581312	SUCTION BLOCK
6	1	8581261	ADAPTOR
7	8	9100206	SPRING WASHER
8	4	9213146	BOLT
9	1	8600304	O RING
10	1	8600124	O RING
11	1	1290054	GEARBOX LABEL
12	2	05.282.08	SPRING WASHER
13	2	05.839.01	BOLT
14	4	04.282.17	STUD
15	4	9100205	SPRING WASHER
16	4	9343065	CAPSCREW
17	4	9113006	NUT

* Note: Right and Left Hand builds differ only in the placement of the Gearbox Label - the label should be on the uppermost surface of the Gearbox in the specific build when viewed in position on the machine.

TI PUMP & GEARBOX ASSEMBLY

Modules:
7155735 – L/H Build
7155736 – R/H Build

Illustrated in Left Hand Build

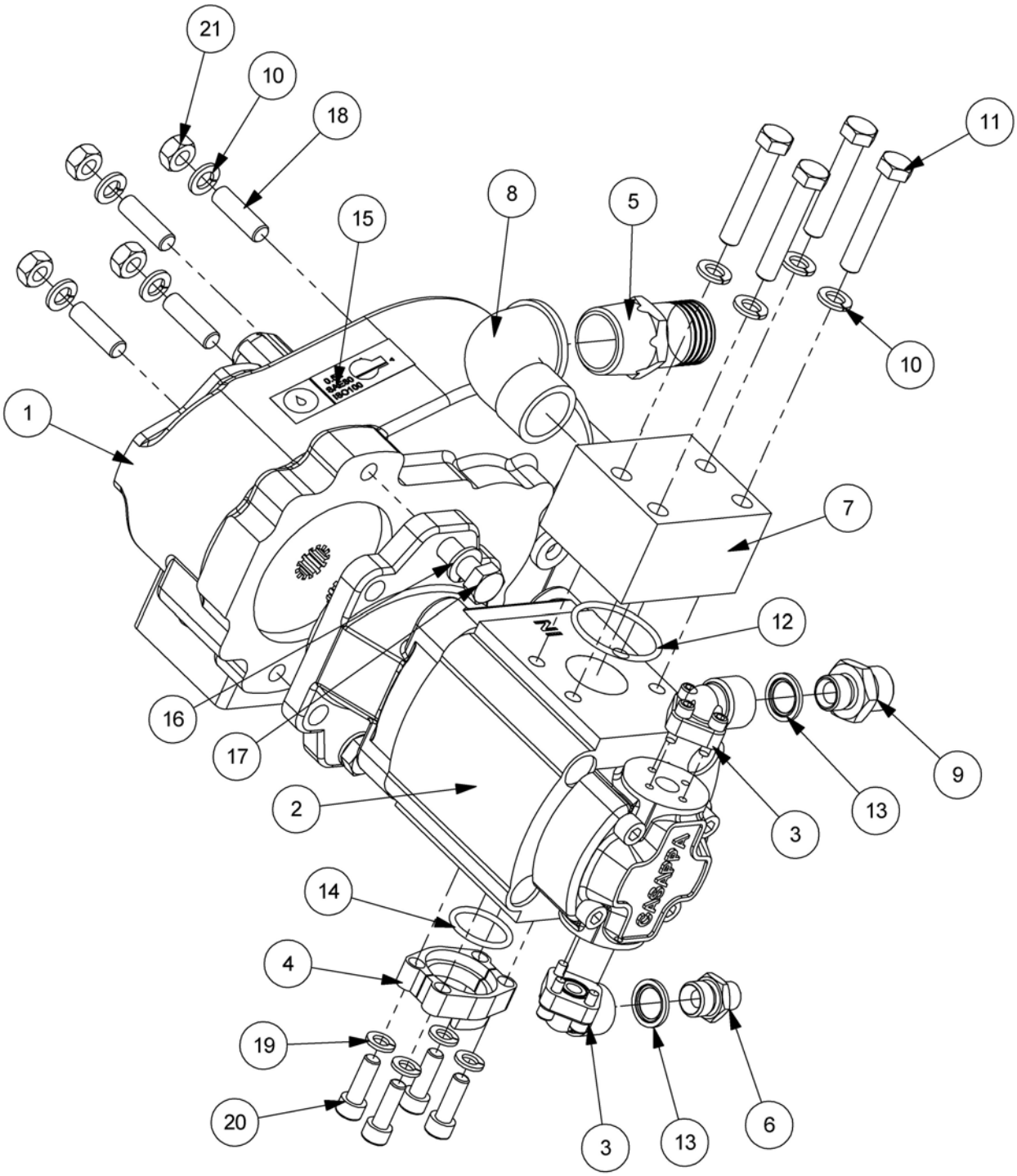

TI PUMP & GEARBOX ASSEMBLY

REF.	QTY.	PART No.	DESCRIPTION
		7155735	**TI PUMP & GEARBOX ASSEMBLY - L/H Build**
		7155736	**TI PUMP & GEARBOX ASSEMBLY - R/H Build**
1	1	42693.10	GEARBOX - CAST IRON
2	1	8201718	PUMP
3	2	8301045	ELBOW c/w 3 CAPSCREWS & O RING
4	1	01.697.03	SPLIT FLANGE
5	1	8581367	ADAPTOR
6	1	6000112	ADAPTOR
7	1	8581312	SUCTION BLOCK
8	1	8581261	ADAPTOR
9	1	8581130	ADAPTOR
10	8	9100206	SPRING WASHER
11	4	9213146	BOLT
12	1	8600304	O RING
13	2	8650104	BONDED SEAL
14	1	8600124	O RING
15	1	1290054	GEARBOX LABEL
16	2	05.282.08	SPRING WASHER
17	2	05.839.01	BOLT
18	4	04.282.17	STUD
19	4	9100205	SPRING WASHER
20	4	9343065	CAPSCREW
21	4	9113006	NUT

* Note: Right and Left Hand builds differ only in the placement of the Gearbox Label - the label should be on the uppermost surface of the Gearbox in the specific build when viewed in position on the machine.

TI PUMP & GEARBOX ASSEMBLY

Modules:
7155795 – L/H Build
7155796 – R/H Build

Illustrated in Left Hand Build

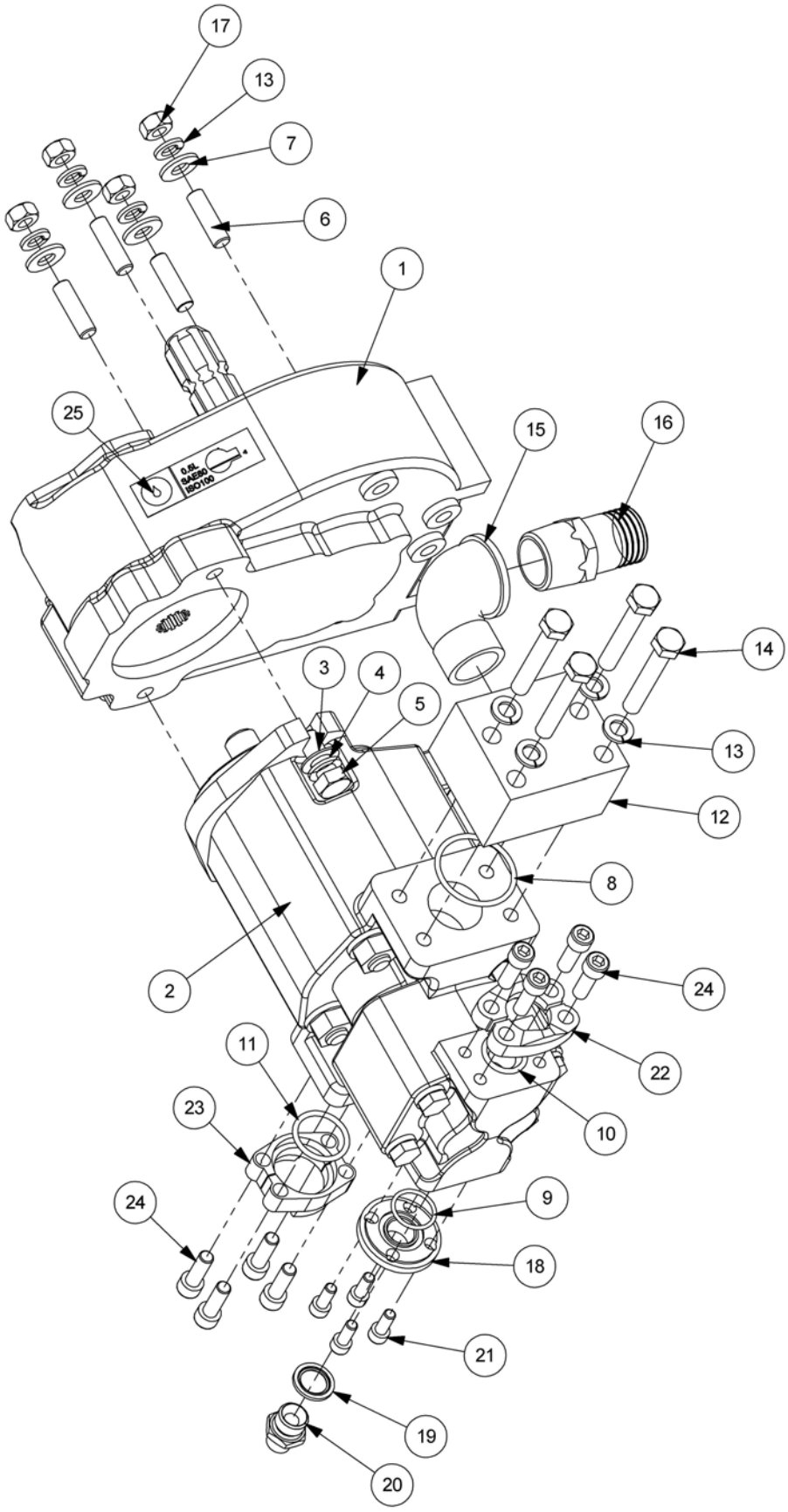

TI PUMP & GEARBOX ASSEMBLY

REF.	QTY.	PART No.	DESCRIPTION
		7155795	**TI PUMP & GEARBOX ASSEMBLY - L/H Build**
		7155796	**TI PUMP & GEARBOX ASSEMBLY - R/H Build**
1	1	42693.06	GEARBOX
2	1	8201703	TANDEM PUMP ASSEMBLY - 65HP
3	2	9100020	FLAT WASHER
4	2	05.282.08	SPRING WASHER
5	2	05.839.01	BOLT
6	4	04.282.17	STUD
7	4	9100106	FLAT WASHER
8	1	8600304	O RING
9	1	8600405	O RING
10	1	8600119	O RING
11	1	8600124	O RING
12	1	8581312	SUCTION BLOCK
13	8	9100206	SPRING WASHER
14	4	9213156	BOLT
15	1	8581261	ADAPTOR
16	1	8581367	ADAPTOR - LOW PRESSURE
17	4	9113006	NUT
18	1	42029.01	PORT PLATE
19	1	8650104	BONDED SEAL
20	1	6000112	ADAPTOR
21	4	9300147	CAPSCREW
22	1	41.294.02	SPLIT FLANGE
23	1	01.697.03	SPLIT FLANGE
24	8	9343065	CAPSCREW
25	1	1290054	GEARBOX LABEL
26	1	8501311	HOSE - 3/4" SAE90 x 3/4" BSP FS - 950MM LONG

* Note: Right and Left Hand builds differ only in the placement of the Gearbox Label - the label should be on the uppermost surface of the Gearbox in the specific build when viewed in position on the machine.

ROTOR RELIEF VALVE – SI Models

Modules:
7155762 – L/H Build
7155763 – R/H Build

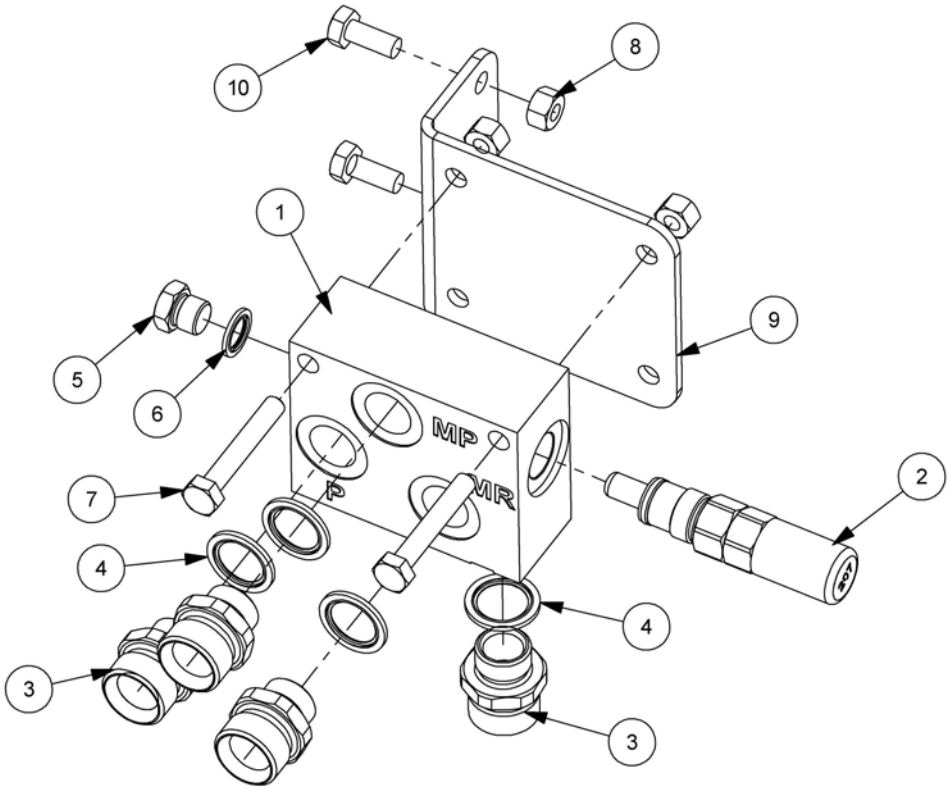

Left Hand Build - 7155762

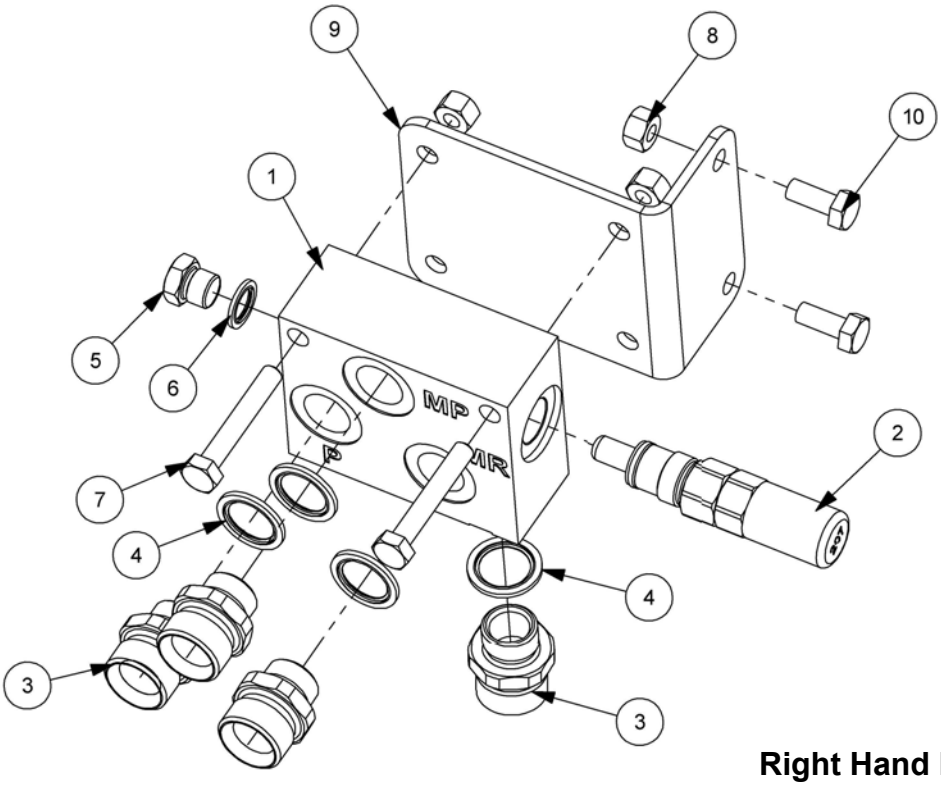

Right Hand Build - 7155763

ROTOR RELIEF VALVE – SI Models

REF.	QTY.	PART No.	DESCRIPTION
		7155762	**ROTOR RELIEF VALVE ASSEMBLY - L/H Build**
		7155763	**ROTOR RELIEF VALVE ASSEMBLY - R/H Build**
1	1	8125352	ROTOR RELIEF BLOCK
2	1	8125095	RELIEF VALVE - 207 BAR
3	4	8002086	ADAPTOR
4	4	8650106	BONDED SEAL
5	1	8003001	ADAPTOR PLUG
6	1	8650103	BONDED SEAL
7	2	9213135	BOLT
8	4	9143005	SELF-LOCKING NUT
9	1	21354.02	BRACKET
10	2	9313055	SETSCREW

CABLE ROTOR CONTROL VALVES

Modules:
7155766 – L/H Electric Build
7155767 – R/H Electric Build

Illustrated in Left Hand Build

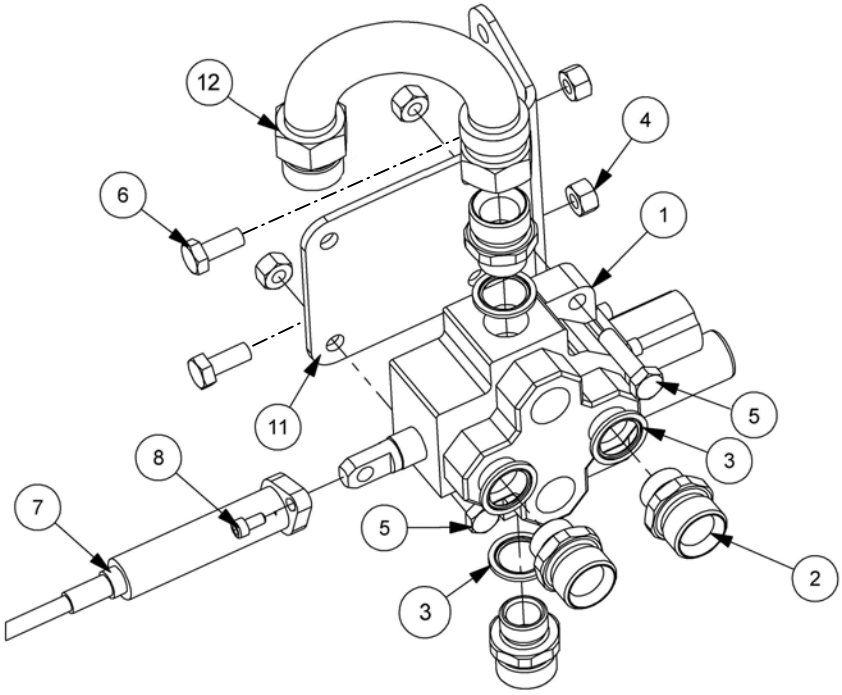

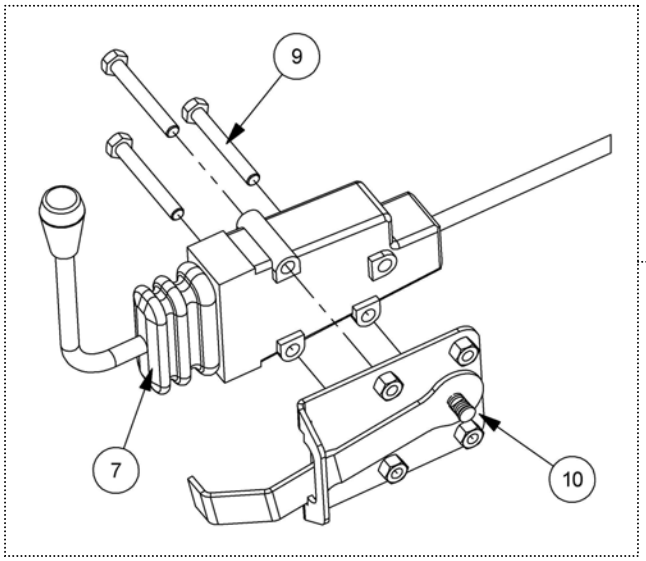

Modules:
7155788 – L/H Cable Build
7155789 – R/H Cable Build

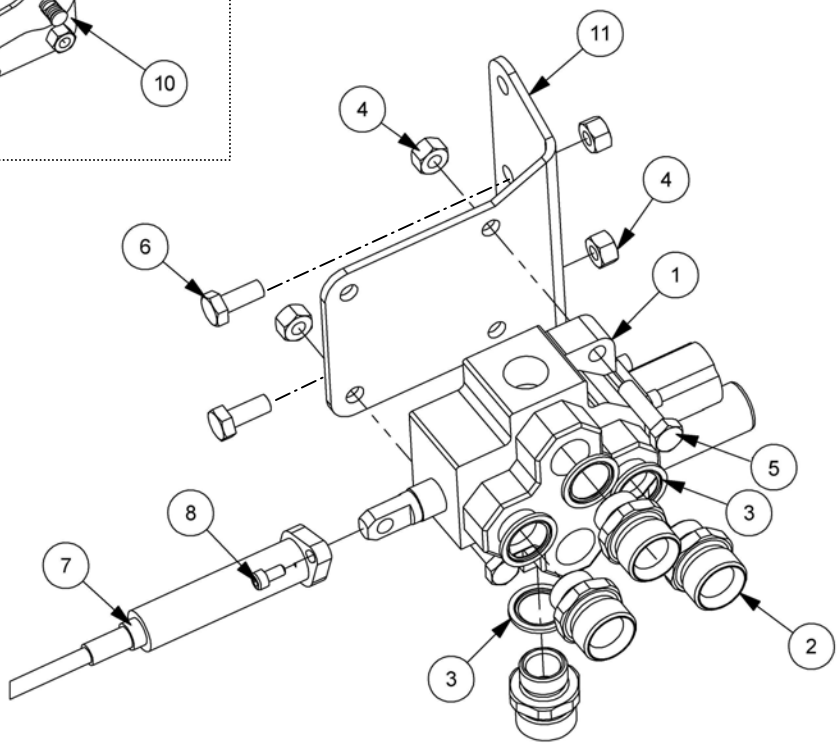

CABLE ROTOR CONTROL VALVES

REF.	QTY.	PART No.	DESCRIPTION
		7155766	**CABLE RCV FOR ELECTRIC MODELS - L/H Build**
		7155767	**CABLE RCV FOR ELECTRIC MODELS - R/H Build**
1	1	8125385	ROTOR CONTROL VALVE (207BAR) - L/H Build
		8125355	ROTOR CONTROL VALVE (207BAR) - R/H Build
2	4	8002086	ADAPTOR
3	4	8650106	BONDED SEAL
4	4	9143005	SELF-LOCKING NUT
5	2	9213085	BOLT
6	2	9313055	SETSCREW
7	1	04.265.92	CABLE ASSEMBLY - 2.5m
8	2	9343023	CAPSCREW
9	3	9213124	BOLT
10	1	42511.01	BALKING ASSEMBLY
11	1	21354.01	BRACKET - CABLE RCV
12	1	46043.01	RIGID PIPE

REF.	QTY.	PART No.	DESCRIPTION
		7155788	**CABLE RCV FOR CABLE MODELS - L/H Build**
		7155789	**CABLE RCV FOR CABLE MODELS - R/H Build**
1	1	8125385	ROTOR CONTROL VALVE (207BAR) - L/H Build
		8125355	ROTOR CONTROL VALVE (207BAR) - R/H Build
2	4	8002086	ADAPTOR
3	4	8650106	BONDED SEAL
4	4	9143005	SELF-LOCKING NUT
5	2	9213085	BOLT
6	2	9313055	SETSCREW
7	1	04.265.92	CABLE ASSEMBLY - 2.5m
8	2	9343023	CAPSCREW
9	3	9213124	BOLT
10	1	42511.01	BALKING ASSEMBLY
11	1	21354.01	BRACKET - CABLE RCV

Modules:
7155768 – L/H Build
7155769 – R/H Build

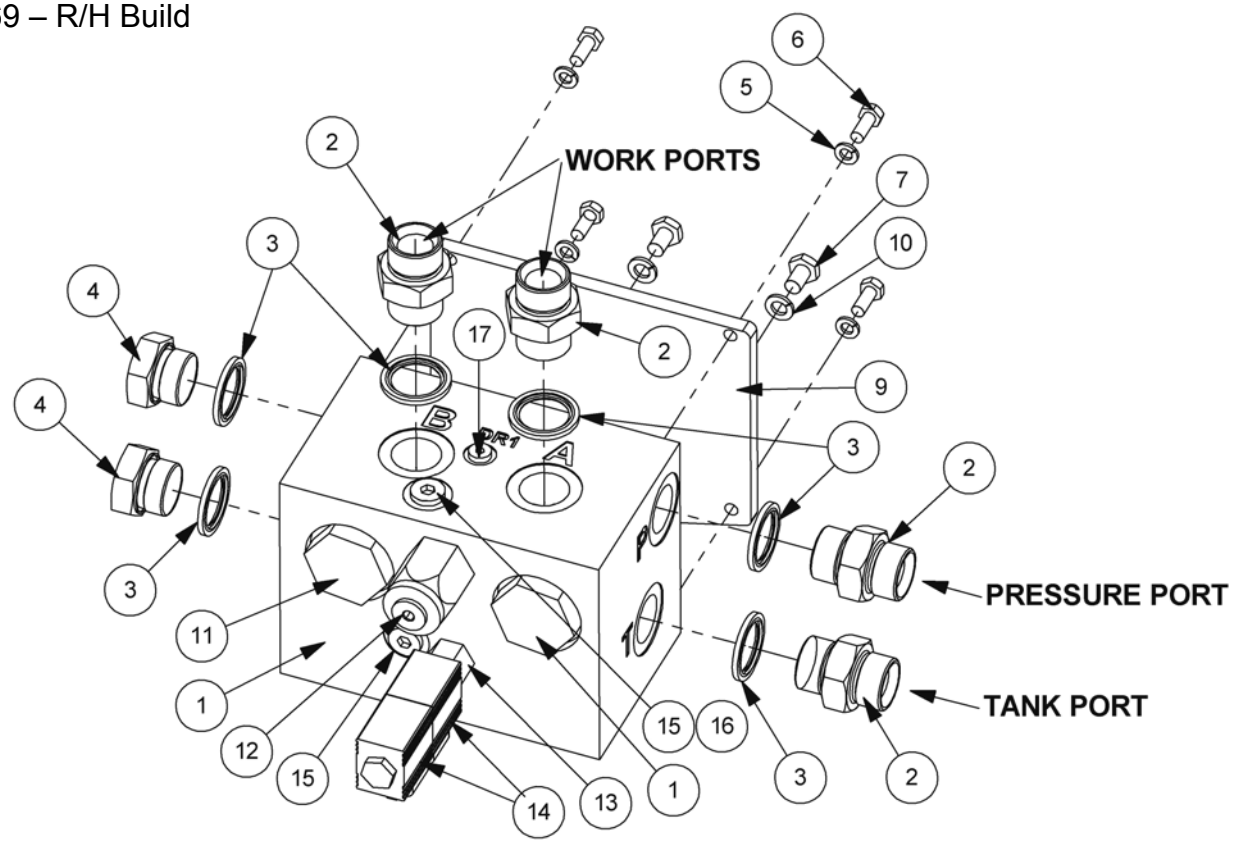

Electric RCV - L/H Build (7155768)

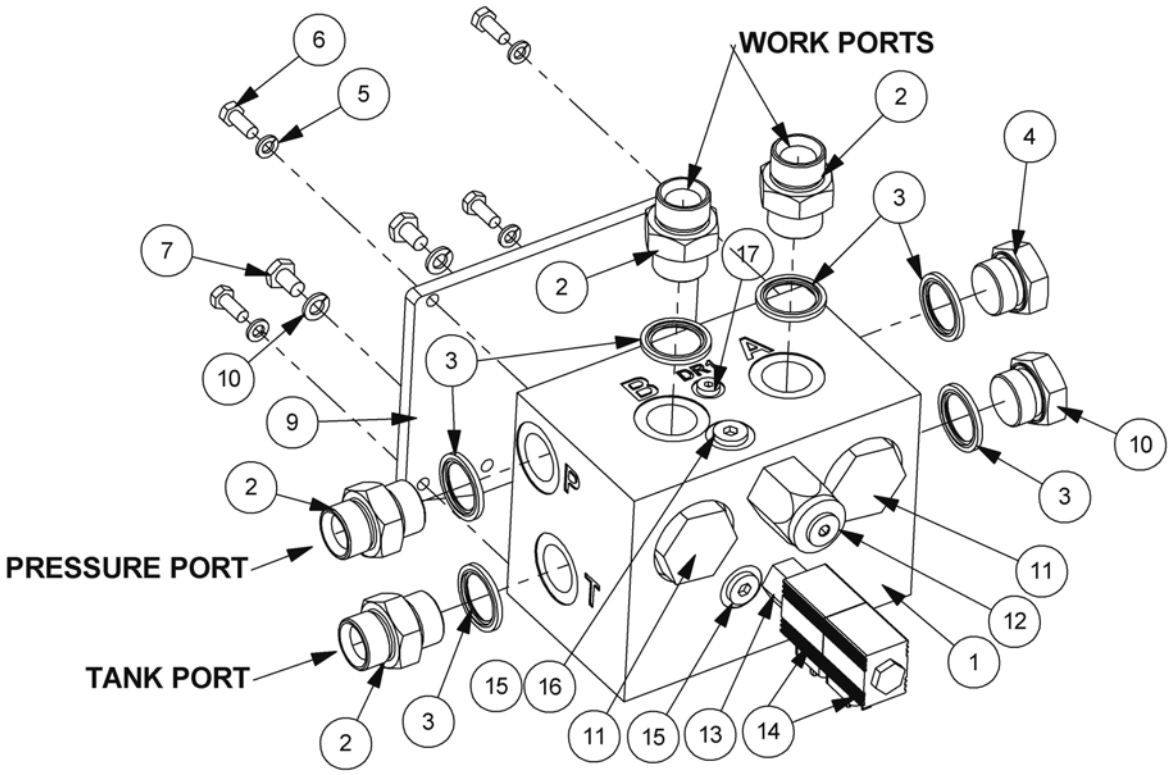

Electric RCV - R/H Build (7155769)

ELECTRIC ROTOR CONTROL VALVE

REF.	QTY.	PART No.	DESCRIPTION
		7155768	**ELECTRIC RCV - L/H Build**
		7155769	**ELECTRIC RCV - R/H Build**
1	1	42768.01	ELECTRIC REVERSING VALVE
2	4	05.434.01	ADAPTOR 1"BSP MM
3	6	8650108	BONDED SEAL 1"BSP
4	2	8581389	ADAPTOR PLUG 1"BSP
5	4	9100204	SPRING WASHER M8
6	4	9313044	SETSCREW M8x20
7	2	9313035	SETSCREW M10x16
8	1	43177.26	LOOM ROTOR REVERSE
9	1	21352.01	RCV MOUNTING PLATE
10	2	9100205	SPRING WASHER M10
11	4	42768.32	LOGIC ELEMENT
12	1	42768.33	RELIEF VALVE - 207 BAR
13	1	42768.34	SPOOL - OPEN CENTRE
14	2	42768.35	SOLENOID
15	2	42768.36	ORIFICE PLUG
16	1	42768.39	PLUG
17	1	42768.42	ORIFICE PLUG

CABLE CONTROL VALVE

Modules:
7155740 – L/H build
7155741 – R/H build

Illustrated in Left Hand build

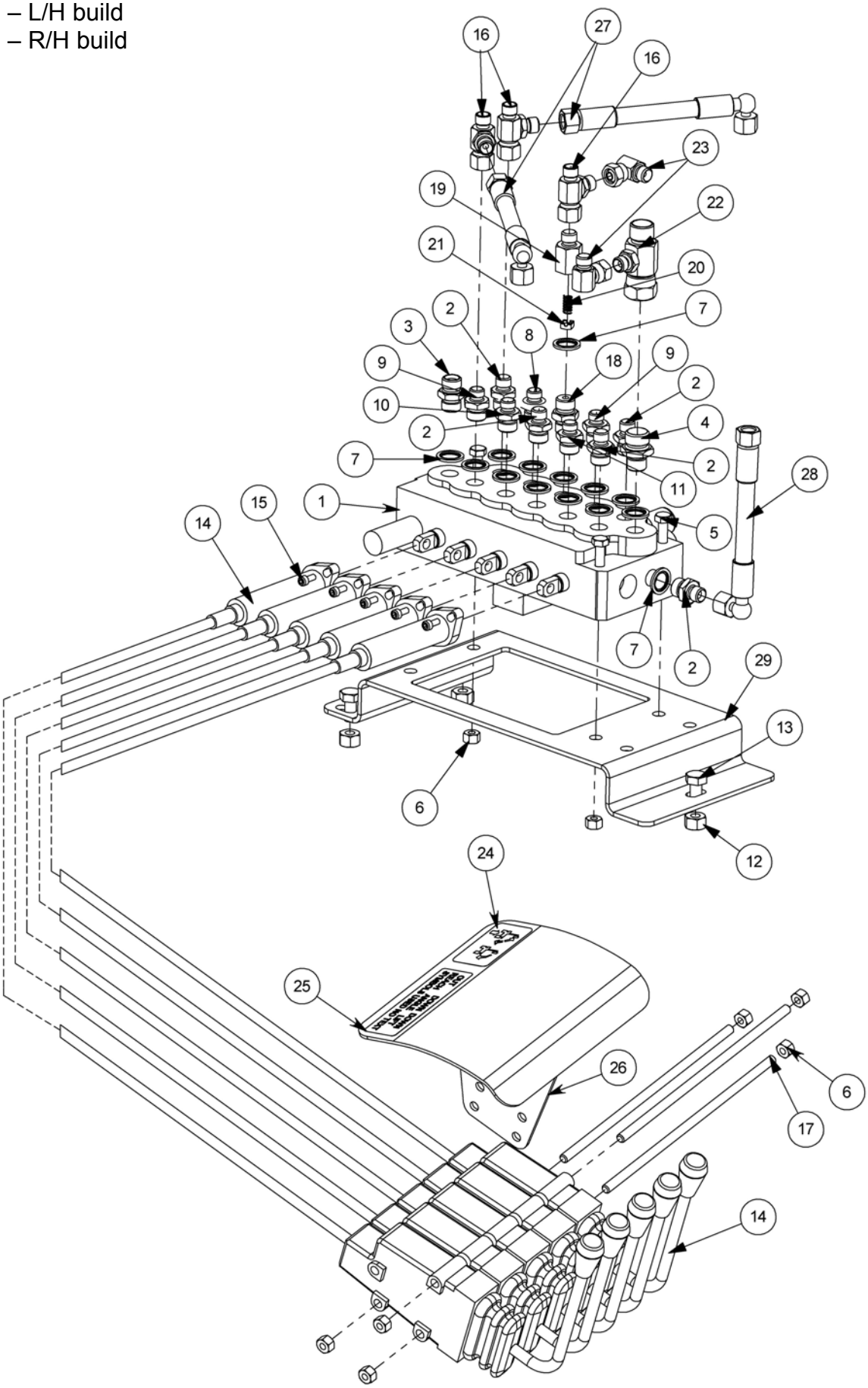

CABLE CONTROL VALVE

REF.	QTY.	PART No.	DESCRIPTION
		7155740	**CABLE CONTROL VALVE - Std. L/H Models**
		7155741	**CABLE CONTROL VALVE - Std. R/H Models**
1	1	8130656	CONTROL VALVE - 5 SPOOL.
2	5	8581115	ADAPTOR
3	1	6000113	ADAPTOR
4	1	6000112	ADAPTOR
5	3	9213134	BOLT
6	9	9143004	SELF-LOCKING NUT
7	14	8650103	BONDED SEAL
8	1	8130047	ADAPTOR RESTRICTOR - 1.8 'B'
9	2	8130066	ADAPTOR RESTRICTOR - 1.15 'M'
10	1	8130046	ADAPTOR RESTRICTOR - 1.5 'A'
11	1	8130048	ADAPTOR RESTRICTOR - 1.3 'C'
12	3	9143005	SELF-LOCKING NUT
13	3	9313045	SETSCREW
14	5	04.265.87	CABLE ASSEMBLY - 3.0m
15	10	9343022	CAPSCREW
16	3	8581254	ADAPTOR TEE
17	3	04.282.43	STUD
18	1	8581209	ADAPTOR
19	1	8581214	ADAPTOR
20	1	8116011	SPRING
21	1	8123043	RESTRICTOR DISC - 1.6 GREEN
22	1	04.056.25	ADAPTOR TEE
23	2	8581190	ADAPTOR ELBOW - 90°
24	1	1290357	CONTROL STICKER
25	1	1290368	CONTROL STICKER
26	1	42256.03	ARM REST
27	2	10.002.04	HOSE -1/4" BSP FS/F90 x 200mm LONG
28	1	10.002.08	HOSE -1/4" BSP FS/F90 x 400mm LONG
29	1	21355.01	BRACKET - CABLE ARMHEAD VALVE

ELECTRIC CONTROL VALVE

Modules:
7155742 – L/H build
7155743 – R/H build

Illustrated in Left Hand build

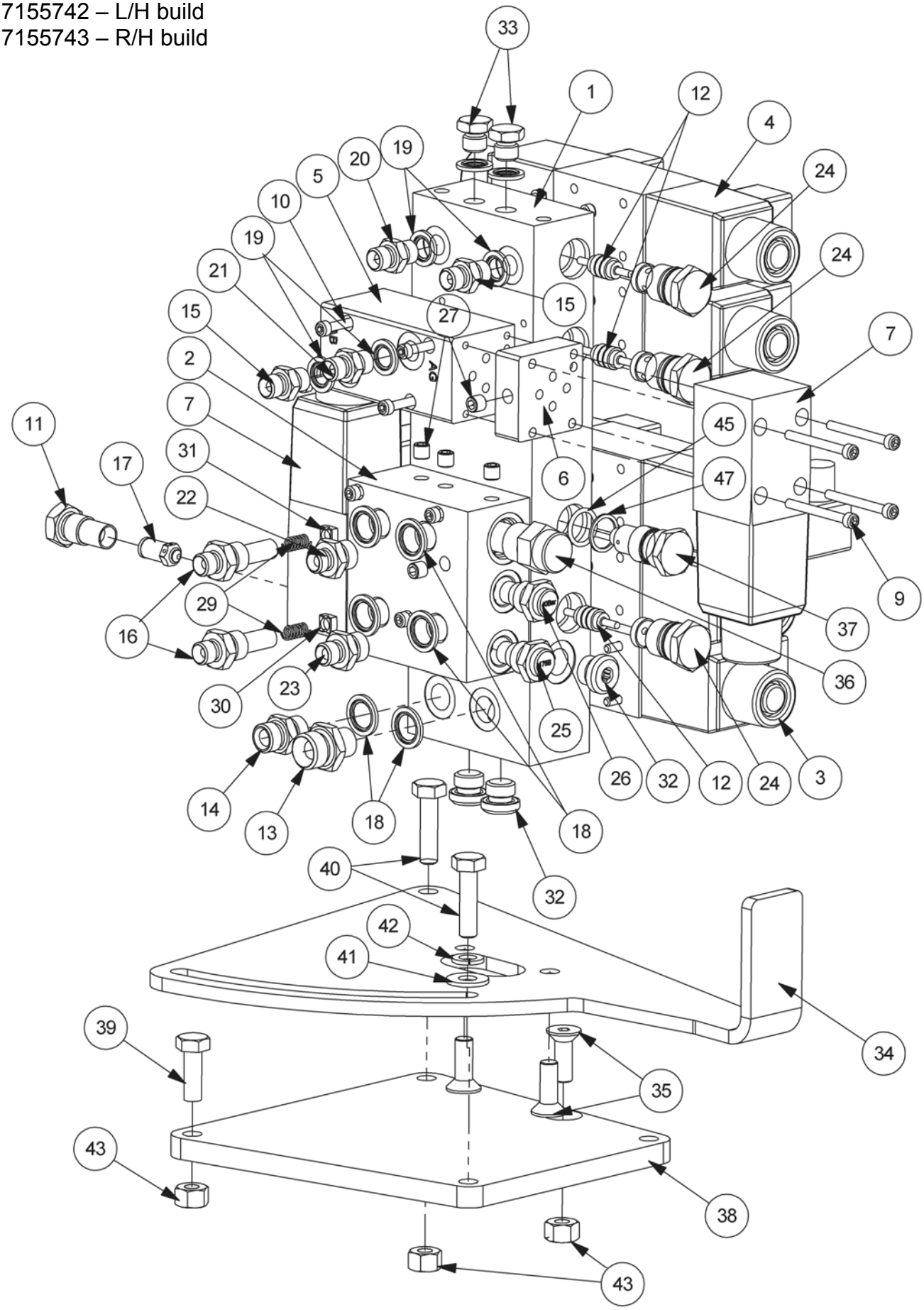

ELECTRIC CONTROL VALVE

REF.	QTY.	PART No.	DESCRIPTION
		7155742	**ELECTRIC CONTROL VALVE - Std. L/H Models**
		7155743	**ELECTRIC CONTROL VALVE - Std. R/H Models**
1	1	8132280	MANIFOLD BLOCK
2	1	8132279	AUTO RESET BLOCK
3	1	8130456	CUT OFF SOLENOID VALVE
4	4	8130629	VALVE DOUBLE SOLENOID
5	1	8126333	FLOAT VALVE BLOCK
6	1	8126334	BRIDGING PLATE
7	2	8130457	SOLENOID VALVE - SINGLE
8	24	9243062	CAPSCREW
9	4	9243102	CAPSCREW
10	8	9243082	CAPSCREW
11	1	8130032	RELIEF VALVE CAP
12	4	8130087	ACTUATOR
13	1	6000112	ADAPTOR
14	1	6000113	ADAPTOR
15	2	8130105	ADAPTOR RESRICTOR - 1.6 'H'
16	2	8581210	ADAPTOR
17	1	8130092	RELIEF VALVE - 190BAR
18	7	8650103	BONDED SEAL
19	6	8650102	BONDED SEAL
20	1	8130104	ADAPTOR RESRICTOR - 1.8 'G'
21	1	8130038	ADAPTOR RESRICTOR - 1.4 'L'
22	1	8130068	ADAPTOR RESRICTOR - 0.9 'T'
23	1	8581115	ADAPTOR
24	7	8130090	CHECK VALVE ASSEMBLY
25	1	8128022	VALVE - SERVICE RELIEF 50-220BAR
26	1	8128065	VALVE - SERVICE RELIEF 40BAR
27	5	8582041	TAPER PLUG
28	12	8700511	O RING
29	2	8116011	SPRING
30	1	8123041	RESTRICTOR DISC - 1.15 RED
31	1	8123044	RESTRICTOR DISC - 1.8 YELLOW
32	3	8581436	PLUG - SOFT SEAL
33	2	520378	ADAPTOR PLUG
34	1	21351.01	VALVE MOUNTING PLATE - L/H build
		21351.02	VALVE MOUNTING PLATE - R/H build
35	3	9353065	CAPSCREW
36	1	8130204	CARTRIDGE SPOOL VALVE
37	1	8130207	CHECK VALVE CAP - DRILLED
38	1	21350.01	VALVE SPACER PLATE
39	1	9313065	SETSCREW
40	2	9213085	BOLT
41	1	9100105	FLAT WASHER
42	1	9100205	SPRING WASHER
43	3	9143005	SELF-LOCKING NUT
44	1	8700525	O RING - METRIC
45	1	8700644	O RING - METRIC
46	1	41844.01	LOOM - 19 CORE *(not illustrated)*
47	1	8709644	BACK UP RING
48	1	8402338	LOOM - ANGLE FLOAT *(not illustrated)*

PROPORTIONAL CONTROL VALVE

Modules:
7155744 – L/H build
7155745 – R/H build

Illustrated in Left Hand build

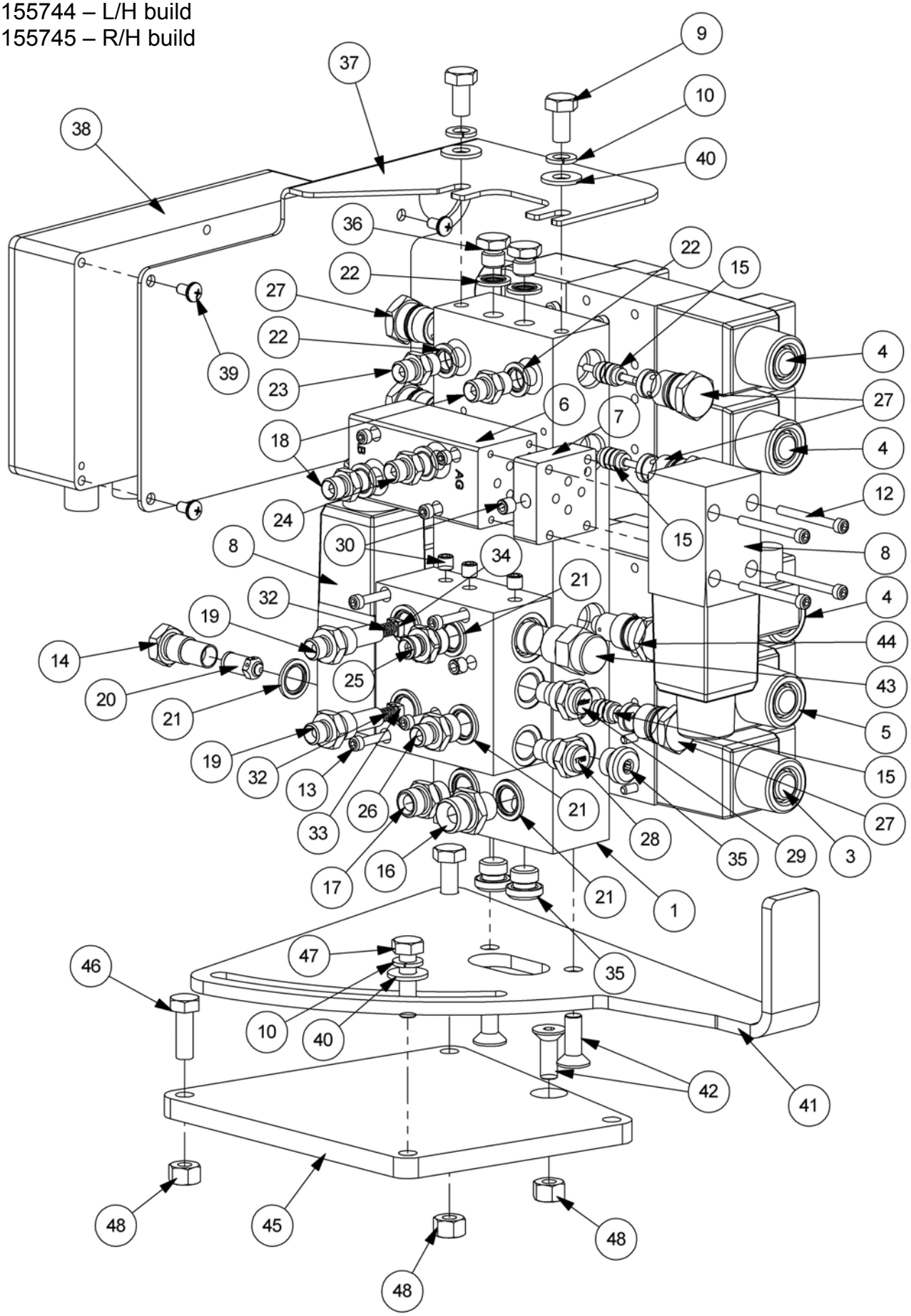

PROPORTIONAL CONTROL VALVE

REF.	QTY.	PART No.	DESCRIPTION
		7155744	**PROP. CONTROL VALVE - Std. L/H Models**
		7155745	**PROP. CONTROL VALVE - Std. R/H Models**
1	1	8132280	MANIFOLD BLOCK
2	1	8132279	AUTO RESET BLOCK
3	1	8130456	CUT OFF SOLENOID VALVE
4	3	41784.48	DOUBLE SOLENOID PROPORTIONAL VALVE
5	1	8130629	VALVE DOUBLE SOLENOID
6	1	8126333	FLOAT VALVE BLOCK
7	1	8126334	BRIDGING PLATE
8	2	8130457	SOLENOID VALVE SINGLE
9	2	9313045	SETSCREW
10	3	9100205	SPRING WASHER
11	24	9243062	CAPSCREW
12	4	9243102	CAPSCREW
13	8	9243082	CAPSCREW
14	1	8130032	RELIEF VALVE CAP
15	4	8130087	ACTUATOR
16	1	6000112	ADAPTOR
17	1	6000113	ADAPTOR
18	2	8130105	ADAPTOR RESTRICTOR
19	2	8581210	ADAPTOR - SPECIAL
20	1	8130092	RELIEF VALVE - 190BAR
21	7	8650103	BONDED SEAL
22	6	8650102	BONDED SEAL
23	1	8130104	ADAPTOR RESTRICTOR - 1.8 'G'
24	1	8130038	ADAPTOR RESTRICTOR - 1.4 'L'
25	1	8130068	ADAPTOR RESTRICTOR - 0.9 'T'
26	2	8581115	ADAPTOR
27	7	8130090	CHECK VALVE ASSEMBLY
28	1	8128022	VALVE SERVICE RELIEF 50-220BAR
29	1	8128065	VALVE SERVICE RELIEF 40BAR
30	5	8582041	TAPER PLUG
31	12	8700511	O RING
32	2	8116011	SPRING
33	1	8123041	RESTRICTOR DISC - 1.15 RED
34	1	8123044	RESTRICTOR DISC - 1.8 YELLOW
35	3	8581436	PLUG - SOFT SEAL
36	2	520378	ADAPTOR PLUG
37	1	21170.01	CONTROLLER MOUNTING BRACKET - L/H Build
	1	21170.03	CONTROLLER MOUNTING BRACKET - R/H Build
38	1	21164.03	CONTROLLER ASSEMBLY - v.3
39	4	9300164	TAPTITE
40	3	9100105	FLAT WASHER
41	1	21351.01	VALVE MOUNTING PLATE - L/H build
	1	21351.02	VALVE MOUNTING PLATE - R/H build
42	3	9353065	CAPSCREW
43	1	8130204	CARTRIDGE SPOOL VALVE
44	1	8130207	CHECK VALVE CAP - DRILLED
45	1	21350.01	VALVE SPACER PLATE
46	1	9313065	SETSCREW
47	2	9213085	BOLT
48	3	9143005	SELF-LOCKING NUT

MIDCUT PROP. CONTROL VALVE

Modules:
7155760 – L/H Build
7155761 – R/H Build

Illustrated in Left-Hand Build

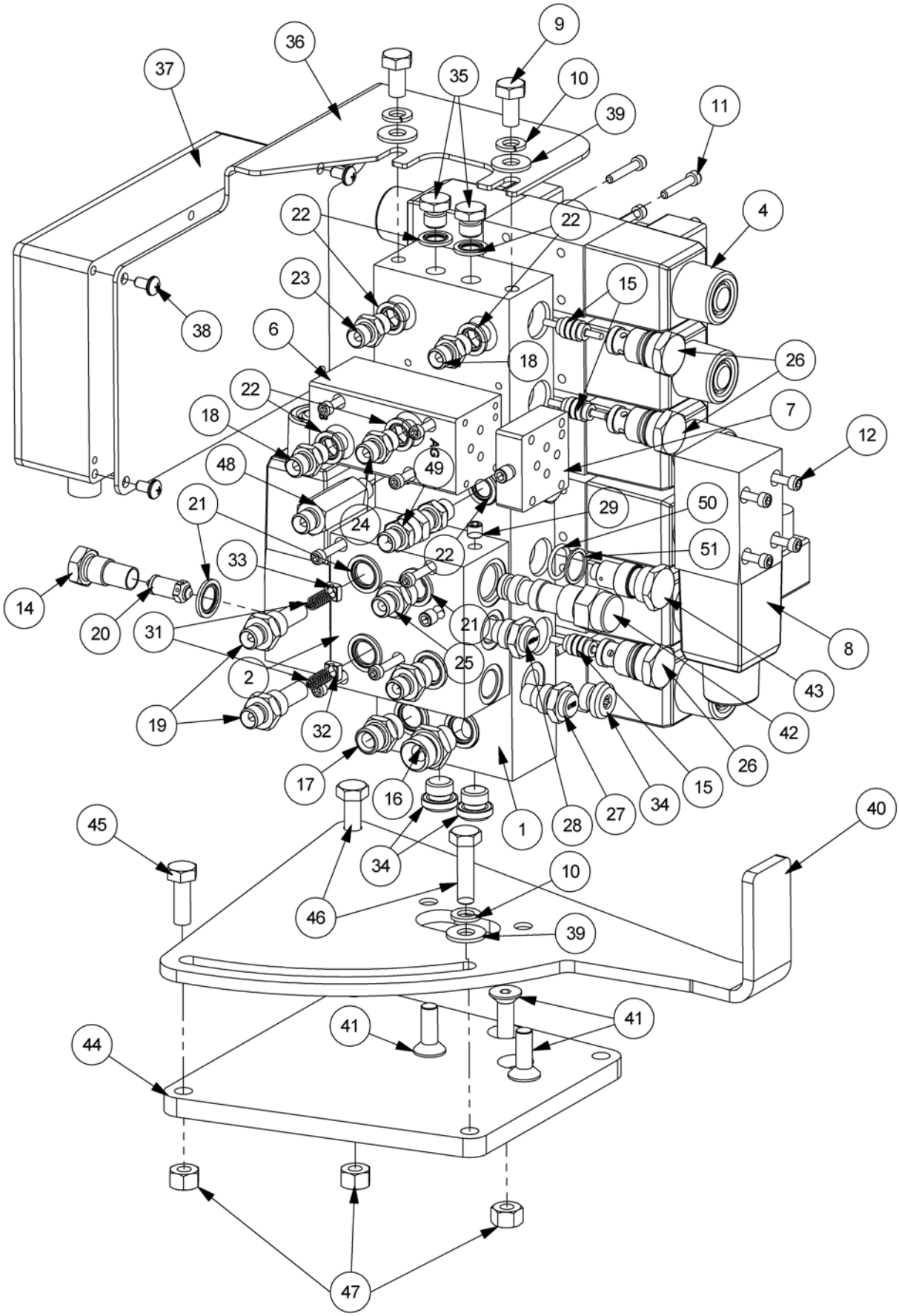

MIDCUT PROP. CONTROL VALVE

REF.	QTY.	PART No.	DESCRIPTION
		7155760	**PROP. CONTROL VALVE - Midcut L/H Models**
		7155761	**PROP. CONTROL VALVE - Midcut R/H Models**
1	1	8132281	MANIFOLD BLOCK - 5 SERVICE
2	1	8132279	AUTO RESET BLOCK
3	1	8130456	CUT OFF SOLENOID VALVE
4	3	41784.48	DOUBLE SOLENOID PROPORTIONAL VALVE
5	2	8130629	VALVE DOUBLE SOLENOID
6	1	8126333	FLOAT VALVE BLOCK
7	1	8126334	BRIDGING PLATE
8	2	8130457	SOLENOID VALVE SINGLE
9	2	9313045	SETSCREW
10	3	9100205	SPRING WASHER
11	28	9243062	CAPSCREW
12	4	9243102	CAPSCREW
13	8	9243082	CAPSCREW
14	1	8130032	RELIEF VALVE CAP
15	5	8130087	ACTUATOR
16	1	6000112	ADAPTOR
17	1	6000113	ADAPTOR
18	2	8130105	ADAPTOR RESTRICTOR - 1.6 'H'
19	2	8581210	ADAPTOR
20	1	8130092	RELIEF VALVE - 190BAR
21	7	8650103	BONDED SEAL
22	8	8650102	BONDED SEAL
23	1	8130104	ADAPTOR RESTRICTOR - 1.8 'G'
24	2	8130038	ADAPTOR RESTRICTOR - 1.4 'L'
25	2	8581115	ADAPTOR
26	9	8130090	CHECK VALVE ASSEMBLY
27	1	8128022	VALVE SERVICE RELIEF50-220BAR
28	1	8128065	VALVE SERVICE RELIEF 40BAR
29	5	8582041	TAPER PLUG
30	12	8700511	O RING
31	2	8116011	SPRING
32	1	8123041	RESTRICTOR DISC - 1.15 RED
33	1	8123044	RESTRICTOR DISC - 1.8 YELLOW
34	3	8581436	PLUG
35	2	520378	ADAPTOR PLUG
36	1	21170.01	CONTROLLER MOUNTING BRACKET - L/H Build
	1	21170.03	CONTROLLER MOUNTING BRACKET - R/H Build
37	1	21164.03	CONTROLLER V3 ASSY
38	4	9300164	TAPTITE
39	3	9100105	FLAT WASHER
40	1	21351.01	VALVE MOUNTING PLATE - L/H Build
	1	21351.02	VALVE MOUNTING PLATE - R/H Build
41	3	9353065	CAPSCREW
42	1	8130204	CARTRIDGE SPOOL VALVE
43	1	8130207	CHECK VALVE CAP - DRILLED
44	1	21350.01	VALVE SPACER PLATE
45	1	9313065	SETSCREW
46	2	9213085	BOLT
47	3	9143005	SELF-LOCKING NUT
48	1	8581279	ADAPTOR EXTENTION
49	1	8581309	SWIVEL ADAPTOR
50	1	8700644	O RING
51	1	8709644	BACK UP RING
52	1	8700525	O RING

ACV HOSES - Cable

Modules:
7155740 – L/H Standard Cable Build
7155741 – R/H Standard Cable Build

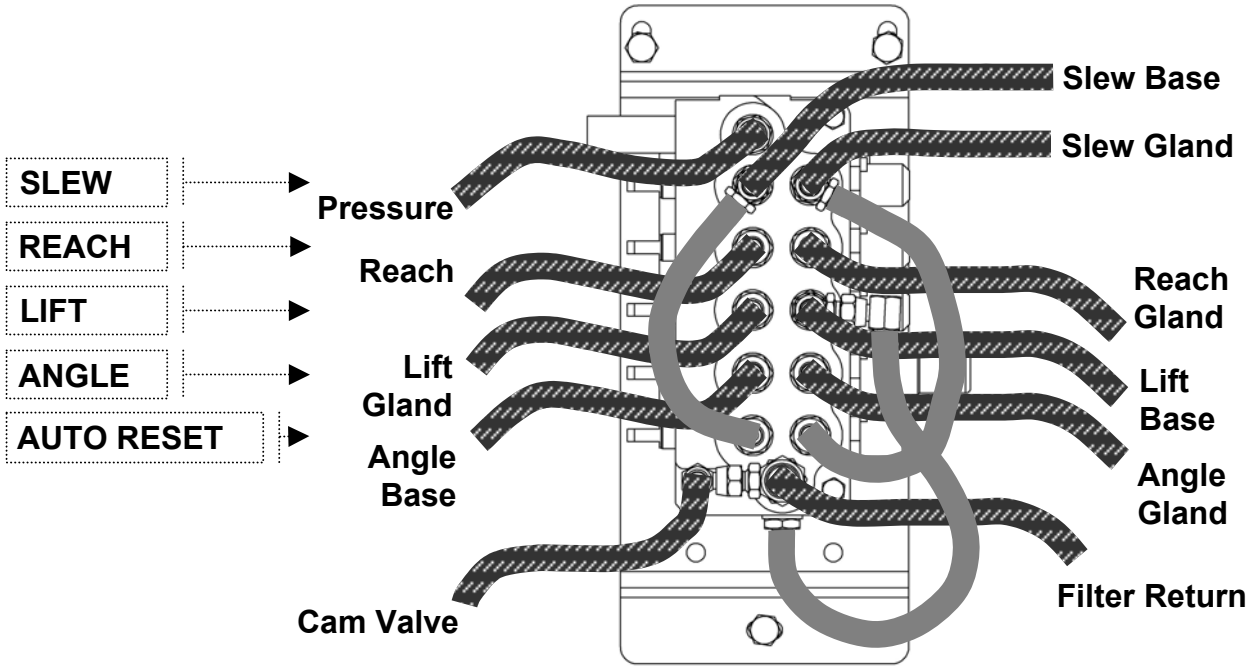

ACV HOSES

REF.	QUANTITY													PART No.	DESCRIPTION
														71557221	**PA55 HOSE KIT - L/H CABLE SI**
														71557222	**PA55 HOSE KIT - L/H CABLE TI**
														71557223	**PA55 HOSE KIT - L/H ELECTRIC (CABLE RCV)**
														71557225	**PA55 HOSE KIT - L/H ELECTRIC/PROP. (ELEC. RCV)**
														715572225	**PA55 HOSE KIT - L/H PROP. 1.5m MIDCUT**
														715572235	**PA55 HOSE KIT - L/H PROP. 0.74m MIDCUT**
														715572265	**PA55 HOSE KIT - L/H ELEC/PROP. R/SWEPT ARM**
														71557226	**PA55 HOSE KIT - R/H CABLE SI**
														71557227	**PA55 HOSE KIT - R/H CABLE TI**
														71557228	**PA55 HOSE KIT - R/H ELECTRIC (CABLE RCV)**
														715572210	**PA55 HOSE KIT - R/H ELECTRIC/PROP. (ELEC. RCV)**
														715572230	**PA55 HOSE KIT - R/H PROP. 1.5m MIDCUT**
														715572240	**PA55 HOSE KIT - R/H PROP. 0.74m MIDCUT**
1	-	1	1	1	1	1	1	-	-	-	-	-	-	10.004.18	HOSE - 3/8" BSP FS/F90 x 900MM LONG
	-	-	-	-	-	-	-	-	-	1	1	1	1	10.004.14	HOSE - 3/8" BSP FS/F90 x 700MM LONG
	-	-	-	-	-	-	-	-	1	-	-	-	-	10.004.16	HOSE - 3/8" BSP FS/F90 x 800MM LONG
2	-	-	1	1	1	1	1	-	-	1	1	1	1	10.006.12	HOSE - 1/2" BSP FS/F90 x 600MM LONG
3	-	1	-	-	-	-	-	-	1	-	-	-	-	10.006.14	HOSE - 1/2" BSP FS/F90 x 700MM LONG
4	1	-	-	-	-	-	-	1	-	-	-	-	-	10.004.30	HOSE - 3/8" BSP FS/F90 x 2000MM LONG
5	1	-	-	-	-	-	-	1	-	-	-	-	-	10.006.30	HOSE - 1/2" BSP FS/F90 x 2000MM LONG
6	1	1	1	1	1	1	1	1	1	1	1	1	1	10.001.21	HOSE - 1/4" BSP FS/FS x 1100MM LONG
7	-	-	1	1	1	1	1	-	-	1	1	1	1	10.002.22	HOSE - 1/4" BSP FS/F90 x 1200MM LONG
8	1	1	-	-	-	-	-	1	1	-	-	-	-	10.002.27	HOSE - 1/4" BSP FS/F90 x 1700MM LONG
9	1	1	-	-	-	-	-	1	1	-	-	-	-	10.002.23	HOSE - 1/4" BSP FS/F90 x 1300MM LONG
10	1	1	1	1	1	1	1	1	1	1	1	1	1	10.001.35	HOSE - 1/4" BSP FS/FS x 2500MM LONG
11	1	1	1	1	1	1	1	1	1	1	1	1	1	10.002.40	HOSE - 1/4" BSP FS/F90 x 2900MM LONG
12	2	2	2	2	2	2	2	2	2	2	2	2	2	10.002.11	HOSE - 1/4" BSP FS/F90 x 550MM LONG
13	2	2	2	2	-	-	-	2	2	2	2	-	-	10.001.54	HOSE - 1/4" BSP FS/FS x 4400MM LONG
	-	-	-	-	-	-	2	-	-	-	-	-	-	10.001.59	HOSE - 1/4" BSP FS/FS x 4900MM LONG
14	-	-	-	-	2	-	-	-	-	-	-	2	-	10.001.47	HOSE - 1/4" BSP FS/FS x 3700MM LONG
	-	-	-	-	-	2	-	-	-	-	-	-	2	10.001.46	HOSE - 1/4" BSP FS/FS x 3600MM LONG
														71607221	**PA60 HOSE KIT - L/H CABLE SI**
														71607222	**PA60 HOSE KIT - L/H CABLE TI**
														71607223	**PA60 HOSE KIT - L/H ELECTRIC (CABLE RCV)**
														71607225	**PA60 HOSE KIT - L/H ELECTRIC (ELEC. RCV)**
														71607225	**PA60 HOSE KIT - L/H PROPORTIONAL (ELEC. RCV)**
														716072235	**PA60 HOSE KIT - L/H ELECTRIC/PROP. MIDCUT**
														71607226	**PA60 HOSE KIT - R/H CABLE SI**
														71607227	**PA60 HOSE KIT - R/H CABLE TI**
														71607228	**PA60 HOSE KIT - R/H ELECTRIC (CABLE RCV)**
														716072210	**PA60 HOSE KIT - R/H ELECTRIC (ELEC. RCV)**
														716072210	**PA60 HOSE KIT - R/H PROPORTIONAL (ELEC. RCV)**
														716072245	**PA60 HOSE KIT - R/H ELECTRIC/PROP. MIDCUT**
1	-	1	1	1	1	1	-	-	-	-	-	-		10.004.18	HOSE - 3/8" BSP FS/F90 x 900MM LONG
	-	-	-	-	-	-	-	-	1	1	1	1		10.004.14	HOSE - 3/8" BSP FS/F90 x 700MM LONG
	-	-	-	-	-	-	-	1	-	-	-	-		10.004.16	HOSE - 3/8" BSP FS/F90 x 800MM LONG
2	-	-	1	1	1	1	-	-	1	1	1	1		10.006.12	HOSE - 1/2" BSP FS/F90 x 600MM LONG
3	-	1	-	-	-	-	-	1	-	-	-	-		10.006.14	HOSE - 1/2" BSP FS/F90 x 700MM LONG
4	1	-	-	-	-	-	1	-	-	-	-	-		10.004.30	HOSE - 3/8" BSP FS/F90 x 2000MM LONG
5	1	-	-	-	-	-	1	-	-	-	-	-		10.006.30	HOSE - 1/2" BSP FS/F90 x 2000MM LONG
6	1	1	1	1	1	1	1	1	1	1	1	1		10.001.21	HOSE - 1/4" BSP FS/FS x 1100MM LONG
7	-	-	1	1	1	1	-	-	1	1	1	1		10.002.22	HOSE - 1/4" BSP FS/F90 x 1200MM LONG
8	1	1	-	-	-	-	1	1	-	-	-	-		10.002.27	HOSE - 1/4" BSP FS/F90 x 1700MM LONG
9	1	1	1	-	-	-	1	1	-	-	-	-		10.002.23	HOSE - 1/4" BSP FS/F90 x 1300MM LONG
10	1	1	1	1	1	1	1	1	1	1	1	1		10.001.35	HOSE - 1/4" BSP FS/FS x 2500MM LONG
11	1	1	1	1	1	1	1	1	1	1	1	1		10.002.40	HOSE - 1/4" BSP FS/F90 x 2900MM LONG
12	2	2	2	2	2	2	2	2	2	2	2	2		10.002.11	HOSE - 1/4" BSP FS/F90 x 550MM LONG
13	2	2	2	2	2	-	2	2	2	2	2	-		10.001.59	HOSE - 1/4" BSP FS/FS x 4900MM LONG
	-	-	-	-	-	2	-	-	-	-	-	2		10.001.67	HOSE - 1/4" BSP FS/FS x 5700MM LONG
14	-	-	-	-	-	2	-	-	-	-	-	2		10.001.48	HOSE - 1/4" BSP FS/FS x 3800MM LONG

1 Control Pump to ACV
2 ACV to Cooler
3 ACV to Tank
4 Tractor to ACV
5 ACV to Tractor
6 ACV to Lift Base
7 ACV to Lift Gland
8 Lift Gland to O/C Valve
9 O/C Valve to ACV
10 ACV to Reach Base
11 ACV to Reach Gland
12 ACV to Slew Base/Gland
13 ACV to Angle Base/Gland
14 Fold Ram Base/Gland (M/cut)

ACV HOSES – Elect/Prop/Midcut

Modules:
7155742 – L/H Standard Electric Build
7155743 – R/H Standard Electric Build
7155744 – L/H Standard Proportional Build
7155745 – R/H Standard Proportional Build
7155760 – L/H Proportional Midcut Build
7155761 – R/H Proportional Midcut Build

STANDARD ELECTRIC/PROPORTIONAL

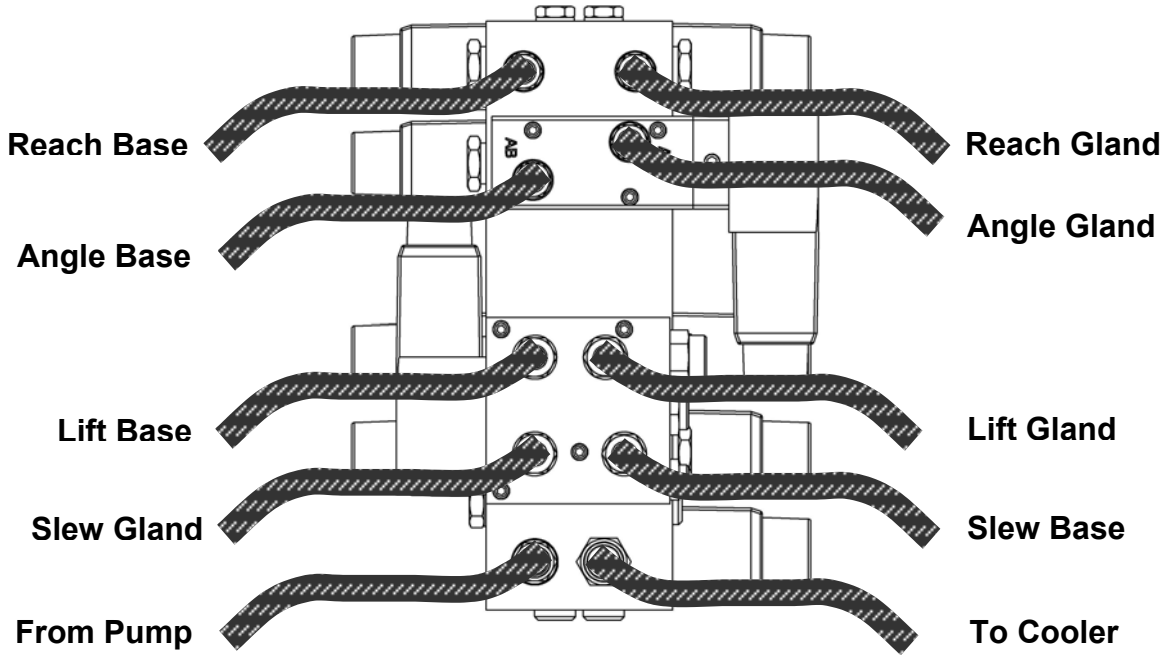

PROPORTIONAL MIDCUT

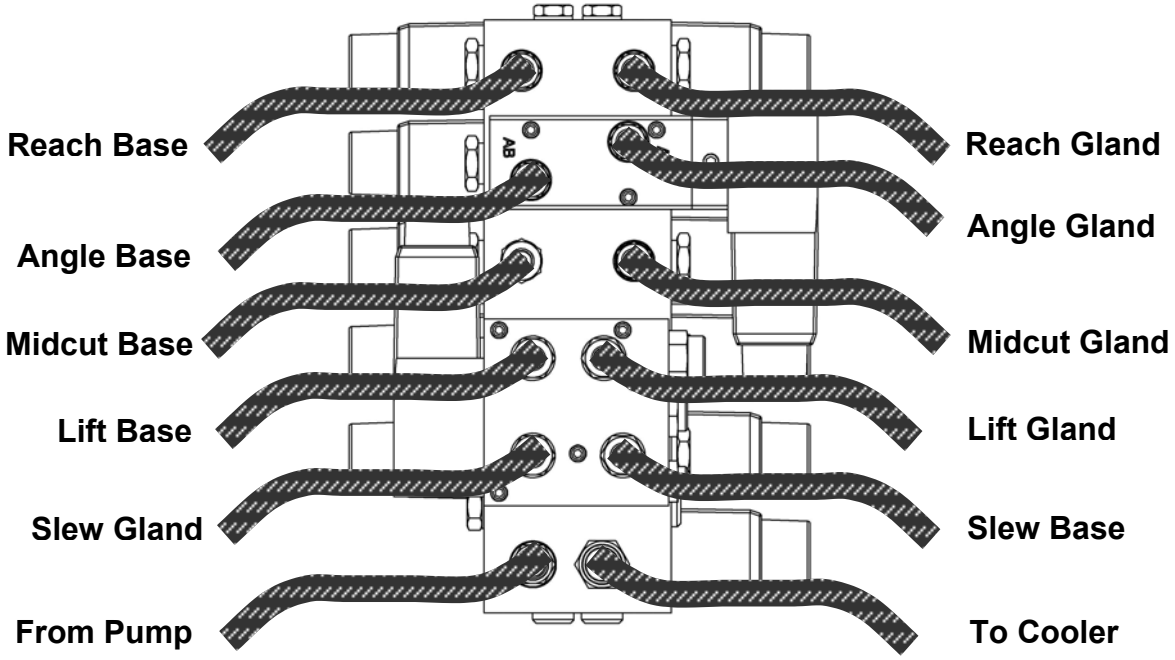

ACV HOSES

REF.	QUANTITY													PART No.	DESCRIPTION
														71557221	**PA55 HOSE KIT - L/H CABLE SI**
														71557222	**PA55 HOSE KIT - L/H CABLE TI**
														71557223	**PA55 HOSE KIT - L/H ELECTRIC (CABLE RCV)**
														71557225	**PA55 HOSE KIT - L/H ELECTRIC/PROP. (ELEC. RCV)**
														715572225	**PA55 HOSE KIT - L/H PROP. 1.5m MIDCUT**
														715572235	**PA55 HOSE KIT - L/H PROP. 0.74m MIDCUT**
														715572265	**PA55 HOSE KIT - L/H ELEC/PROP. R/SWEPT ARM**
														71557226	**PA55 HOSE KIT - R/H CABLE SI**
														71557227	**PA55 HOSE KIT - R/H CABLE TI**
														71557228	**PA55 HOSE KIT - R/H ELECTRIC (CABLE RCV)**
														715572210	**PA55 HOSE KIT - R/H ELECTRIC/PROP. (ELEC. RCV)**
														715572230	**PA55 HOSE KIT - R/H PROP. 1.5m MIDCUT**
														715572240	**PA55 HOSE KIT - R/H PROP. 0.74m MIDCUT**
1	-	1	1	1	1	1	1	-	-	-	-	-	-	10.004.18	HOSE - 3/8" BSP FS/F90 x 900MM LONG
	-	-	-	-	-	-	-	-	-	1	1	1	1	10.004.14	HOSE - 3/8" BSP FS/F90 x 700MM LONG
	-	-	-	-	-	-	-	-	1	-	-	-	-	10.004.16	HOSE - 3/8" BSP FS/F90 x 800MM LONG
2	-	-	1	1	1	1	1	-	-	1	1	1	1	10.006.12	HOSE - 1/2" BSP FS/F90 x 600MM LONG
3	-	1	-	-	-	-	-	-	1	-	-	-	-	10.006.14	HOSE - 1/2" BSP FS/F90 x 700MM LONG
4	1	-	-	-	-	-	-	1	-	-	-	-	-	10.004.30	HOSE - 3/8" BSP FS/F90 x 2000MM LONG
5	1	-	-	-	-	-	-	1	-	-	-	-	-	10.006.30	HOSE - 1/2" BSP FS/F90 x 2000MM LONG
6	1	1	1	1	1	1	1	1	1	1	1	1	1	10.001.21	HOSE - 1/4" BSP FS/FS x 1100MM LONG
7	-	-	1	1	1	1	1	-	-	1	1	1	1	10.002.22	HOSE - 1/4" BSP FS/F90 x 1200MM LONG
8	1	1	-	-	-	-	-	1	1	-	-	-	-	10.002.27	HOSE - 1/4" BSP FS/F90 x 1700MM LONG
9	1	1	-	-	-	-	-	1	1	-	-	-	-	10.002.23	HOSE - 1/4" BSP FS/F90 x 1300MM LONG
10	1	1	1	1	1	1	1	1	1	1	1	1	1	10.001.35	HOSE - 1/4" BSP FS/FS x 2500MM LONG
11	1	1	1	1	1	1	1	1	1	1	1	1	1	10.002.40	HOSE - 1/4" BSP FS/F90 x 2900MM LONG
12	2	2	2	2	2	2	2	2	2	2	2	2	2	10.002.11	HOSE - 1/4" BSP FS/F90 x 550MM LONG
13	2	2	2	2	-	-	-	2	2	2	2	-	-	10.001.54	HOSE - 1/4" BSP FS/FS x 4400MM LONG
	-	-	-	-	-	-	2	-	-	-	-	-	-	10.001.59	HOSE - 1/4" BSP FS/FS x 4900MM LONG
14	-	-	-	-	2	-	-	-	-	-	-	2	-	10.001.47	HOSE - 1/4" BSP FS/FS x 3700MM LONG
	-	-	-	-	-	2	-	-	-	-	-	-	2	10.001.46	HOSE - 1/4" BSP FS/FS x 3600MM LONG
														71607221	**PA60 HOSE KIT - L/H CABLE SI**
														71607222	**PA60 HOSE KIT - L/H CABLE TI**
														71607223	**PA60 HOSE KIT - L/H ELECTRIC (CABLE RCV)**
														71607225	**PA60 HOSE KIT - L/H ELECTRIC (ELEC. RCV)**
														71607225	**PA60 HOSE KIT - L/H PROPORTIONAL (ELEC. RCV)**
														716072235	**PA60 HOSE KIT - L/H ELECTRIC/PROP. MIDCUT**
														71607226	**PA60 HOSE KIT - R/H CABLE SI**
														71607227	**PA60 HOSE KIT - R/H CABLE TI**
														71607228	**PA60 HOSE KIT - R/H ELECTRIC (CABLE RCV)**
														716072210	**PA60 HOSE KIT - R/H ELECTRIC (ELEC. RCV)**
														716072210	**PA60 HOSE KIT - R/H PROPORTIONAL (ELEC. RCV)**
														716072245	**PA60 HOSE KIT - R/H ELECTRIC/PROP. MIDCUT**
1	-	1	1	1	1	1	-	-	-	-	-	-		10.004.18	HOSE - 3/8" BSP FS/F90 x 900MM LONG
	-	-	-	-	-	-	-	-	1	1	1	1		10.004.14	HOSE - 3/8" BSP FS/F90 x 700MM LONG
	-	-	-	-	-	-	-	1	-	-	-	-		10.004.16	HOSE - 3/8" BSP FS/F90 x 800MM LONG
2	-	-	1	1	1	1	-	-	1	1	1	1		10.006.12	HOSE - 1/2" BSP FS/F90 x 600MM LONG
3	-	1	-	-	-	-	-	1	-	-	-	-		10.006.14	HOSE - 1/2" BSP FS/F90 x 700MM LONG
4	1	-	-	-	-	-	1	-	-	-	-	-		10.004.30	HOSE - 3/8" BSP FS/F90 x 2000MM LONG
5	1	-	-	-	-	-	1	-	-	-	-	-		10.006.30	HOSE - 1/2" BSP FS/F90 x 2000MM LONG
6	1	1	1	1	1	1	1	1	1	1	1	1		10.001.21	HOSE - 1/4" BSP FS/FS x 1100MM LONG
7	-	-	1	1	1	1	-	-	1	1	1	1		10.002.22	HOSE - 1/4" BSP FS/F90 x 1200MM LONG
8	1	1	-	-	-	-	1	1	-	-	-	-		10.002.27	HOSE - 1/4" BSP FS/F90 x 1700MM LONG
9	1	1	1	-	-	-	1	1	-	-	-	-		10.002.23	HOSE - 1/4" BSP FS/F90 x 1300MM LONG
10	1	1	1	1	1	1	1	1	1	1	1	1		10.001.35	HOSE - 1/4" BSP FS/FS x 2500MM LONG
11	1	1	1	1	1	1	1	1	1	1	1	1		10.002.40	HOSE - 1/4" BSP FS/F90 x 2900MM LONG
12	2	2	2	2	2	2	2	2	2	2	2	2		10.002.11	HOSE - 1/4" BSP FS/F90 x 550MM LONG
13	2	2	2	2	2	-	2	2	2	2	2	-		10.001.59	HOSE - 1/4" BSP FS/FS x 4900MM LONG
	-	-	-	-	-	2	-	-	-	-	-	2		10.001.67	HOSE - 1/4" BSP FS/FS x 5700MM LONG
14	-	-	-	-	-	2	-	-	-	-	-	2		10.001.48	HOSE - 1/4" BSP FS/FS x 3800MM LONG

1 Control Pump to ACV
2 ACV to Cooler
3 ACV to Tank
4 Tractor to ACV
5 ACV to Tractor
6 ACV to Lift Base
7 ACV to Lift Gland
8 Lift Gland to O/C Valve
9 O/C Valve to ACV
10 ACV to Reach Base
11 ACV to Reach Gland
12 ACV to Slew Base/Gland
13 ACV to Angle Base/Gland
14 Fold Ram Base/Gland (M/cut)

HYDRAULIC HOSE KITS – PA55

Modules:
Refer opposite

Left Hand Cable Ti illustrated

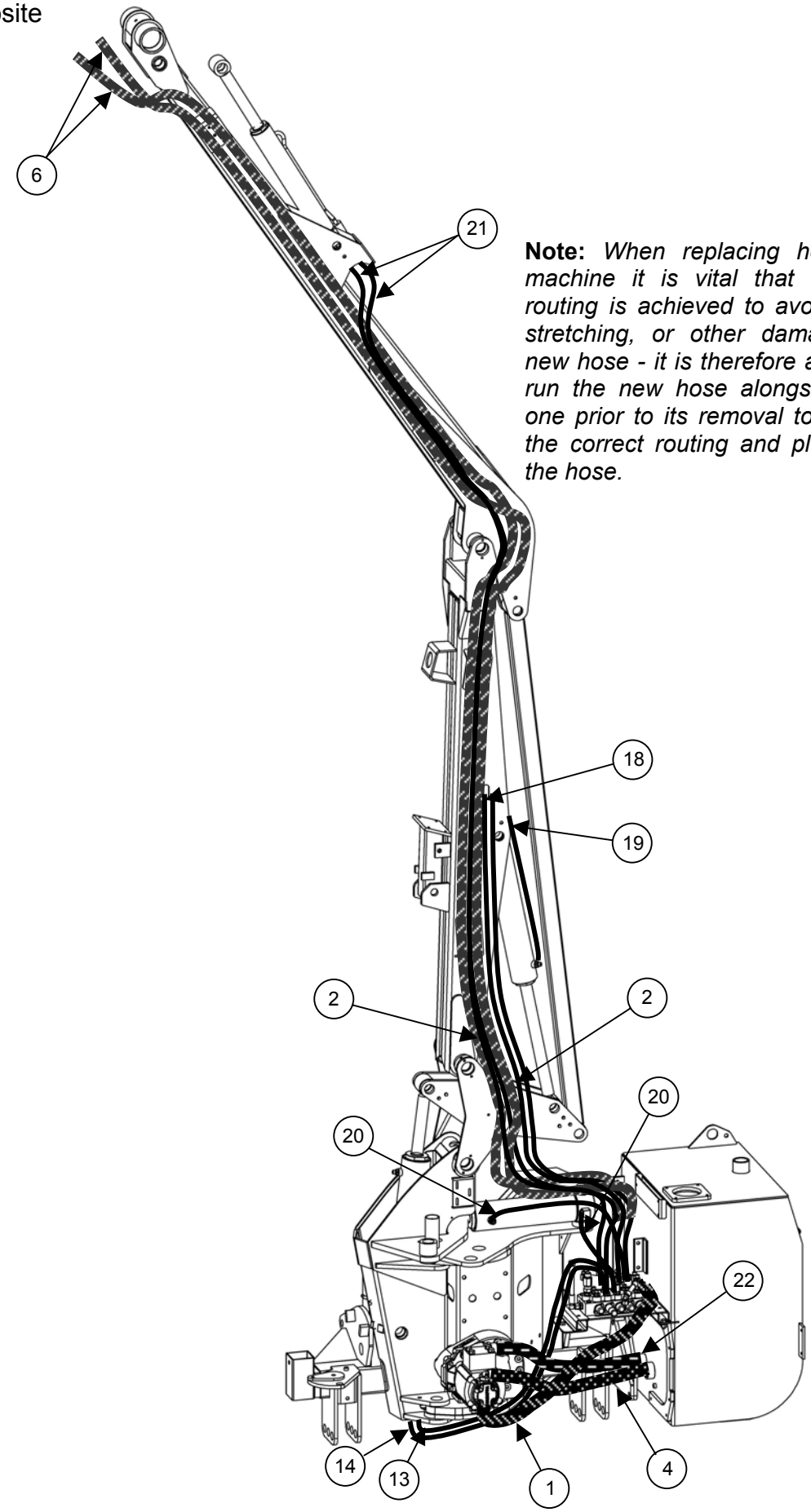

Note: *When replacing hoses on a machine it is vital that the correct routing is achieved to avoid chaffing, stretching, or other damage to the new hose - it is therefore advisable to run the new hose alongside the old one prior to its removal to aid you in the correct routing and placement of the hose.*

HYDRAULIC HOSE KITS – PA55

REF.	QUANTITY													PART No.	DESCRIPTION
														71557221	**PA55 HOSE KIT - L/H CABLE SI**
														71557222	**PA55 HOSE KIT - L/H CABLE TI**
														71557223	**PA55 HOSE KIT - L/H ELECTRIC (CABLE RCV)**
														71557225	**PA55 HOSE KIT - L/H ELECTRIC (ELEC. RCV)** **PA55 HOSE KIT - L/H PROP. (ELEC. RCV)**
														715572225	**PA55 HOSE KIT - L/H PROP. 1.5m MIDCUT**
														715572235	**PA55 HOSE KIT - L/H PROP. 0.74m MIDCUT**
														715572265	**PA55 HOSE KIT - L/H ELEC./PROP R/SWEPT ARM**
														71557226	**PA55 HOSE KIT - R/H CABLE SI**
														71557227	**PA55 HOSE KIT - R/H CABLE TI**
														71557228	**PA55 HOSE KIT - R/H ELECTRIC (CABLE RCV)**
														715572210	**PA55 HOSE KIT - R/H ELECTRIC (ELEC. RCV)** **PA55 HOSE KIT - R/H PROP. (ELEC. RCV)**
														715572230	**PA55 HOSE KIT - R/H PROP. 1.5m MIDCUT**
														715572240	**PA55 HOSE KIT - R/H PROP. 0.74m MIDCUT**
1	-	-	-	-	-	-	-	1	1	1	1	1	1	8501319	HOSE - 1" SAE 90 x 1" BSP FS x 850MM LONG
	1	1	1	-	-	-	-	-	-	-	-	-	-	8501320	HOSE - 1" SAE 90 x 1" BSP FS x 1050MM LONG
	-	-	-	1	1	1	1	-	-	-	-	-	-	8501323	HOSE - 1" SAE 90 x 1" BSP FS x 900MM LONG
2	-	2	2	2	2	2	2	-	2	2	2	2	2	10.025.28	HOSE - 1" BSP FS/F135 x 1800MM LONG
	2	-	-	-	-	-	-	2	-	-	-	-	-	10.025.29	HOSE - 1" BSP FS/F135 x 1900MM LONG
3	2	2	2	2	-	-	-	2	2	2	2	-	-	10.012.46	HOSE - 1" BSP FS/F90 x 3600MM LONG
	-	-	-	-	2	-	-	-	-	-	-	2	-	10.012.62	HOSE - 1" BSP FS/F90 x 5200MM LONG
	-	-	-	-	-	2	-	-	-	-	-	-	2	10.012.54	HOSE - 1" BSP FS/F90 x 4400MM LONG
	-	-	-	-	-	-	2	-	-	-	-	-	-	10.012.51	HOSE - 1" BSP FS/F90 x 4100MM LONG
4	-	1	1	1	1	1	1	-	1	1	1	1	1	10.010.14	HOSE - 3/4" BSP FS/F90 x 700MM LONG
5	-	-	1	1	1	1	1	-	-	1	1	1	1	10.012.15	HOSE - 1" BSP FS/F90 x 750MM LONG
6	-	-	1	1	1	1	1	-	-	1	1	1	1	10.012.22	HOSE - 1" BSP FS/F90 x 1200MM LONG
7	-	1	-	-	-	-	-	-	1	-	-	-	-	10.012.12	HOSE - 1" BSP FS/F90 x 600MM LONG
	1	-	-	-	-	-	-	1	-	-	-	-	-	10.011.11	HOSE - 1" BSP FS/FS x 550MM LONG
8	-	1	1	1	1	1	1	-	-	-	-	-	-	10.004.18	HOSE - 3/8" BSP FS/F90 x 900MM LONG
	-	-	-	-	-	-	-	-	-	1	1	1	1	10.004.14	HOSE - 3/8" BSP FS/F90 x 700MM LONG
	-	-	-	-	-	-	-	-	1	-	-	-	-	10.004.16	HOSE - 3/8" BSP FS/F90 x 800MM LONG
9	-	-	1	1	1	1	1	-	-	1	1	1	1	10.006.12	HOSE - 1/2" BSP FS/F90 x 600MM LONG
10	-	1	-	-	-	-	-	-	1	-	-	-	-	10.006.14	HOSE - 1/2" BSP FS/F90 x 700MM LONG
11	1	-	-	-	-	-	-	1	-	-	-	-	-	10.004.30	HOSE - 3/8" BSP FS/F90 x 2000MM LONG
12	1	-	-	-	-	-	-	1	-	-	-	-	-	10.006.30	HOSE - 1/2" BSP FS/F90 x 2000MM LONG
13	1	1	1	1	1	1	1	1	1	1	1	1	1	10.001.21	HOSE - 1/4" BSP FS/FS x 1100MM LONG
14	-	-	1	1	1	1	1	-	-	1	1	1	1	10.002.22	HOSE - 1/4" BSP FS/F90 x 1200MM LONG
15	1	1	-	-	-	-	-	1	1	-	-	-	-	10.002.27	HOSE - 1/4" BSP FS/F90 x 1700MM LONG
16	1	1	-	-	-	-	-	1	1	-	-	-	-	10.002.23	HOSE - 1/4" BSP FS/F90 x 1300MM LONG
17	1	1	-	-	-	-	-	1	1	-	-	-	-	10.002.22	HOSE - 1/4" BSP FS/F90 x 1200MM LONG
18	1	1	1	1	1	1	1	1	1	1	1	1	1	10.001.35	HOSE - 1/4" BSP FS/FS x 2500MM LONG
19	1	1	1	1	1	1	1	1	1	1	1	1	1	10.002.40	HOSE - 1/4" BSP FS/F90 x 2500MM LONG
20	2	2	2	2	2	2	2	2	2	2	2	2	2	10.002.11	HOSE - 1/4" BSP FS/F90 x 550MM LONG
21	2	2	2	2	-	-	-	2	2	2	2	-	-	10.001.54	HOSE - 1/4" BSP FS/FS x 4400MM LONG
	-	-	-	-	-	-	2	-	-	-	-	-	-	10.001.59	HOSE - 1/4" BSP FS/FS x 4900MM LONG
22	1	1	1	1	-	-	-	1	1	1	1	-	-	8501218	HOSE - 1-1/2" BSP BORE x 600MM LONG
23	-	-	-	-	2	-	-	-	-	-	-	2	-	10.001.47	HOSE - 1/4" BSP FS/FS x 3700MM LONG
	-	-	-	-	-	2	-	-	-	-	-	-	2	10.001.46	HOSE - 1/4" BSP FS/FS x 3600MM LONG
24	-	-	-	-	2	-	-	-	-	-	-	2	-	10.001.70	HOSE - 1/4" BSP FS/FS x 6000MM LONG
	-	-	-	-	-	2	-	-	-	-	-	-	2	10.001.62	HOSE - 1/4" BSP FS/FS x 520000MM LONG

1	***Flail Pump to RCV / RRV***	**9**	***ACV to Cooler***	**17**	***O/C Valve to Accumulator***
2	***RCV to Main Arm***	**10**	***ACV to Tank***	**18**	***ACV to Reach Base***
3	***Main Arm to Pivot***	**11**	***Tractor to ACV***	**19**	***ACV to Reach Gland***
4	***Tank to Control Pump***	**12**	***ACV to Tractor***	**20**	***ACV to Slew Base/Gland***
5	***RCV to Cooler***	**13**	***ACV to Lift Base***	**21**	***ACV to Angle Base/Gland***
6	***Cooler to Tank***	**14**	***ACV to Lift Gland***	**22**	***Tank to Pump***
7	***RCV to Tank***	**15**	***Lift Gland to O/C Valve***	**23**	***Fold Ram Base/Gland (M/cut)***
8	***Control Pump to ACV***	**16**	***O/C Valve to ACV***	**24**	***ACV to Angle Base/Gland (M/cut)***

HYDRAULIC HOSE KITS – PA60

Modules:
Refer opposite

Left Hand Cable Ti illustrated

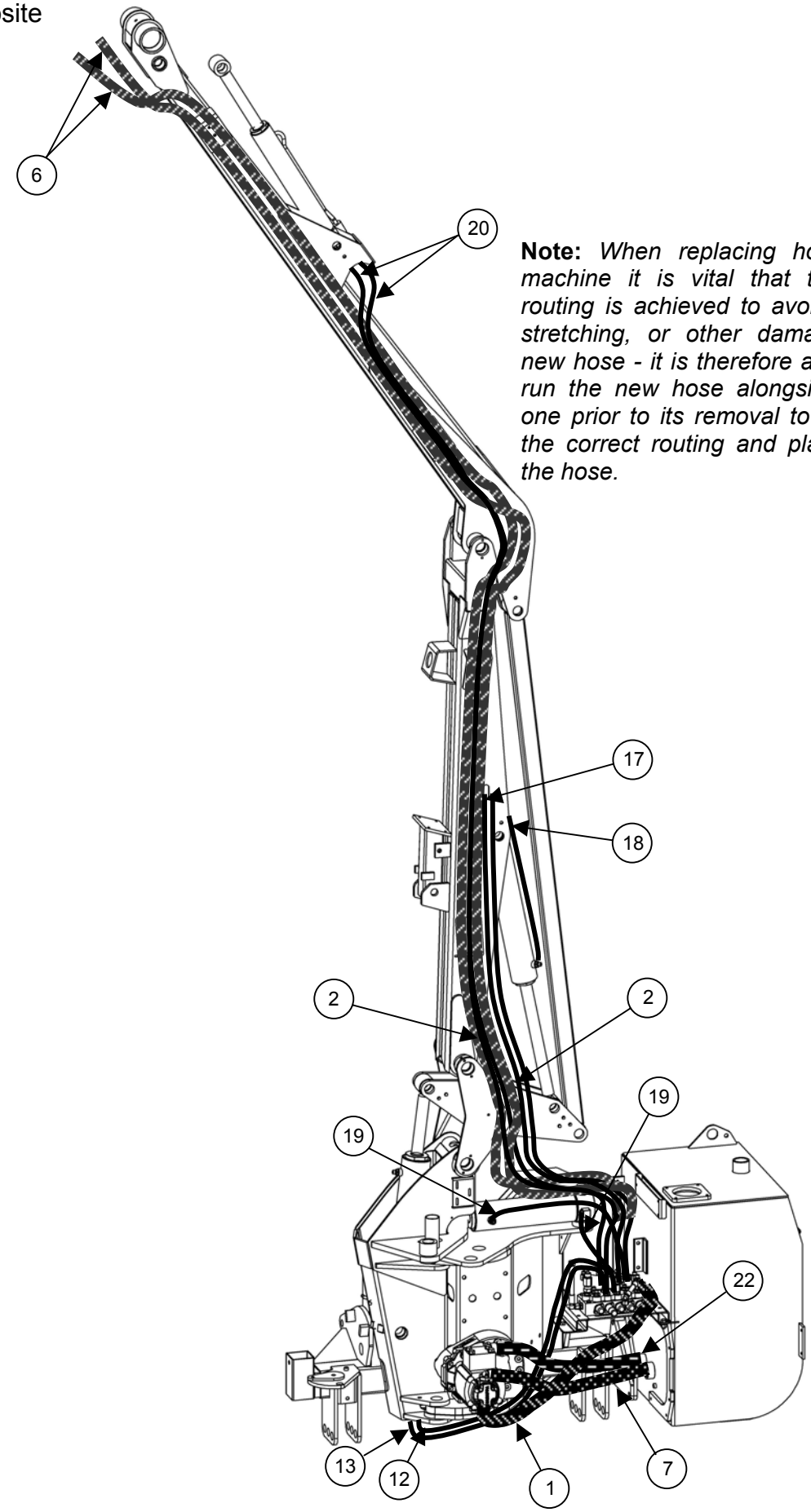

Note: *When replacing hoses on a machine it is vital that the correct routing is achieved to avoid chaffing, stretching, or other damage to the new hose - it is therefore advisable to run the new hose alongside the old one prior to its removal to aid you in the correct routing and placement of the hose.*

HYDRAULIC HOSE KITS – PA60

REF.	QUANTITY										PART No.	DESCRIPTION
											71607221	PA60 HOSE KIT - L/H CABLE SI
											71607222	PA60 HOSE KIT - L/H CABLE TI
											71607223	PA60 HOSE KIT - L/H ELECTRIC (CABLE RCV)
											71607225	PA60 HOSE KIT - L/H ELECTRIC (ELEC. RCV) PA60 HOSE KIT - L/H PROP. (ELEC. RCV)
											716072235	PA60 HOSE KIT - L/H ELECT/PROP. MIDCUT
											71607226	PA60 HOSE KIT - R/H CABLE SI
											71607227	PA60 HOSE KIT - R/H CABLE TI
											71607228	PA60 HOSE KIT - R/H ELECTRIC (CABLE RCV)
											716072210	PA60 HOSE KIT - R/H ELECTRIC (ELEC. RCV) PA60 HOSE KIT - R/H PROP. (ELEC. RCV)
											716072245	PA60 HOSE KIT - R/H ELECT/PROP. MIDCUT
1	-	-	-	-	-	1	1	1	1	1	8501319	HOSE - 1" SAE 90 x 1" BSP FS x 850MM LONG
	1	1	1	-	-	-	-	-	-	-	8501320	HOSE - 1" SAE 90 x 1" BSP FS x 1050MM LONG
	-	-	-	1	1	-	-	-	-	-	8501323	HOSE - 1" SAE 90 x 1" BSP FS x 900MM LONG
2	-	2	2	2	2	-	2	2	2	2	10.025.28	HOSE - 1" BSP FS/F135 x 1800MM LONG
	2	-	-	-	-	2	-	-	-	-	10.025.29	HOSE - 1" BSP FS/F135 x 1900MM LONG
3	2	2	2	2	-	2	2	2	2	-	10.012.51	HOSE - 1" BSP FS/F90 x 4100MM LONG
	-	-	-	-	2	-	-	-	-	2	10.012.59	HOSE - 1" BSP FS/F90 x 4900MM LONG
4	-	1	1	1	1	-	1	1	1	1	10.010.14	HOSE - 3/4" BSP FS/F90 x 700MM LONG
5	-	-	1	1	1	-	-	1	1	1	10.012.15	HOSE - 1" BSP FS/F90 x 750MM LONG
6	-	-	1	1	1	-	-	-	1	1	10.012.22	HOSE - 1" BSP FS/F90 x 1200MM LONG
7	-	1	-	-	-	-	1	1	-	-	10.012.12	HOSE - 1" BSP FS/F90 x 600MM LONG
	1	-	-	-	-	1	-	-	-	-	10.011.11	HOSE - 1" BSP FS/FS x 550MM LONG
8	-	1	1	1	1	-	-	-	-	-	10.004.18	HOSE - 3/8" BSP FS/F90 x 900MM LONG
	-	-	-	-	-	-	-	1	1	1	10.004.14	HOSE - 3/8" BSP FS/F90 x 700MM LONG
	-	-	-	-	-	-	1	-	-	-	10.004.16	HOSE - 3/8" BSP FS/F90 x 800MM LONG
9	-	-	1	1	1	-	-	1	1	1	10.006.12	HOSE - 1/2" BSP FS/F90 x 600MM LONG
	-	1	-	-	-	-	1	-	-	-	10.006.14	HOSE - 1/2" BSP FS/F90 x 700MM LONG
10	1	-	-	-	-	1	-	-	-	-	10.004.30	HOSE - 3/8" BSP FS/F90 x 2000MM LONG
11	1	-	-	-	-	1	-	-	-	-	10.006.30	HOSE - 1/2" BSP FS/F90 x 2000MM LONG
12	1	1	1	1	1	1	1	1	1	1	10.001.21	HOSE - 1/4" BSP FS/FS x 1100MM LONG
13	-	-	1	1	1	-	-	1	1	1	10.002.22	HOSE - 1/4" BSP FS/F90 x 1200MM LONG
14	1	1	-	-	-	1	1	-	-	-	10.002.27	HOSE - 1/4" BSP FS/F90 x 1700MM LONG
15	1	1	1	-	-	1	1	-	-	-	10.002.23	HOSE - 1/4" BSP FS/F90 x 1300MM LONG
16	1	1	1	-	-	1	1	-	-	-	10.002.22	HOSE - 1/4" BSP FS/F90 x 1200MM LONG
17	1	1	1	1	1	1	1	1	1	1	10.001.35	HOSE - 1/4" BSP FS/FS x 2500MM LONG
18	1	1	1	1	1	1	1	1	1	1	10.002.40	HOSE - 1/4" BSP FS/F90 x 2900MM LONG
19	2	2	2	2	2	2	2	2	2	2	10.002.11	HOSE - 1/4" BSP FS/F90 x 550MM LONG
20	2	2	2	2	-	2	2	2	2	-	10.001.59	HOSE - 1/4" BSP FS/FS x 4900MM LONG
	-	-	-	-	2	-	-	-	-	2	10.001.67	HOSE - 1/4" BSP FS/FS x 5700MM LONG
21	-	-	-	-	2	-	-	-	-	2	10.001.48	HOSE - 1/4" BSP FS/FS x 3800MM LONG
22	1	1	1	1	1	1	1	1	1	1	8501218	HOSE - 1-1/2" BSP BORE x 600MM LONG

1 *Flail Pump to RCV / RRV*
2 *RCV to Main Arm*
3 *Main Arm to Pivot*
4 *Tank to Control Pump*
5 *RCV to Cooler*
6 *Cooler to Tank*
7 *RCV to Tank*
8 *Control Pump to ACV*
9 *ACV to Cooler*
10 *Tractor to ACV*
11 *ACV to Tractor*
12 *ACV to Lift Base*
13 *ACV to Lift Gland*
14 *Lift Gland to O/C Valve*
15 *O/C Valve to ACV*
16 *O/C Valve to Accumulator*
17 *ACV to Reach Base*
18 *ACV to Reach Gland*
19 *ACV to Slew Base/Gland*
20 *ACV to Angle Base/Gland*
21 *Midcut Fold Ram*
22 *Tank to Pump*

SERVICE RELIEF KIT - Midcut

Module:
8130666

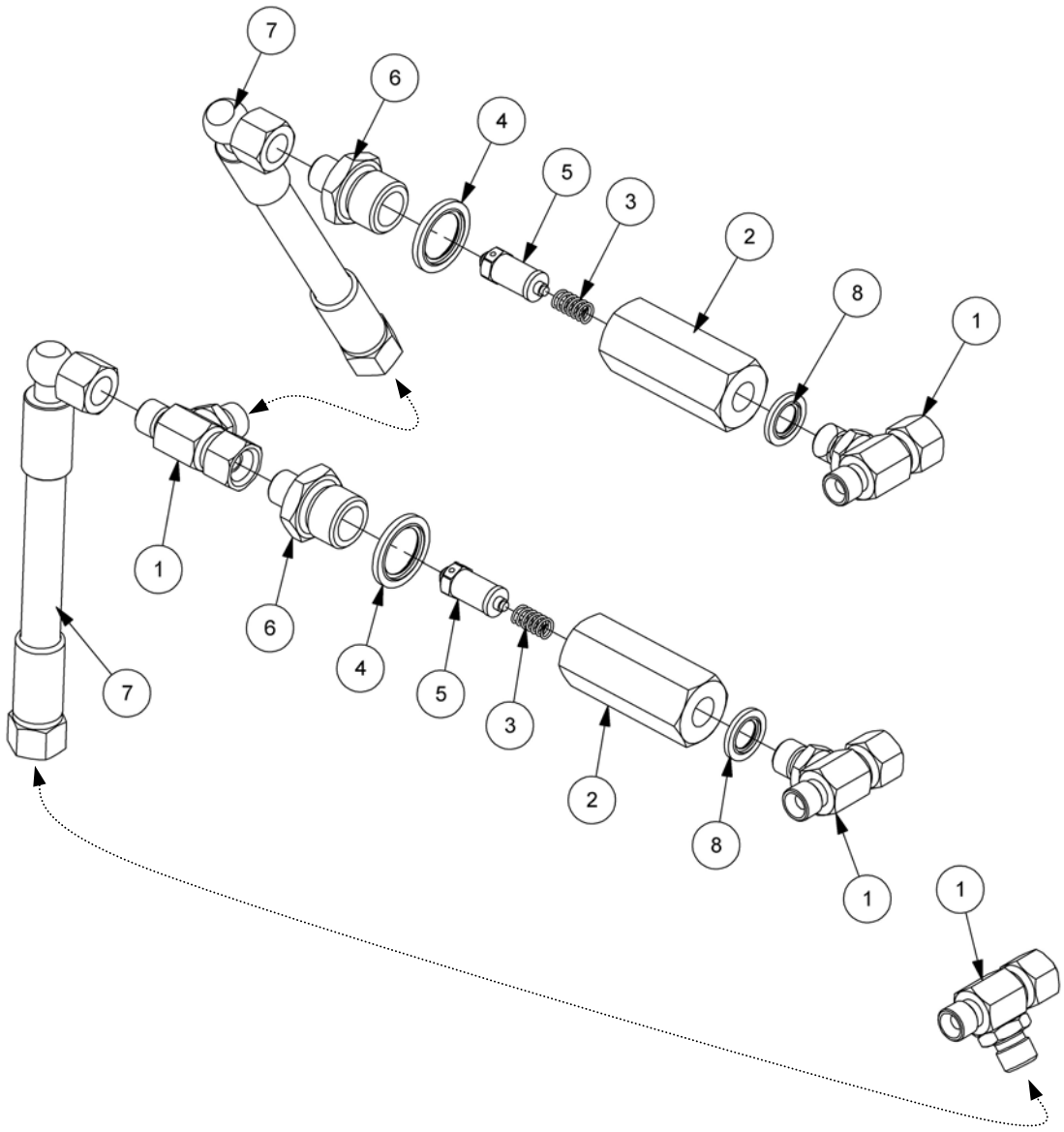

REF.	QTY.	PART No.	DESCRIPTION
		8130666	**MIDCUT SERVICE RELIEF KIT**
1	4	8581254	ADAPTOR TEE
2	2	8130156	ADAPTOR RELIEF HOUSING
3	2	8116011	SPRING
4	2	8650104	BONDED SEAL
5	2	8130092	RELIEF VALVE - 190BAR
6	2	8130083	ADAPTOR RELIEF BODY
7	2	10.002.08	HOSE - 1/4" BSP FS/F90 x 400MM LONG
8	2	8650102	BONDED SEAL

FLAIL ACCUMULATOR (Optional)

Module:
8126339

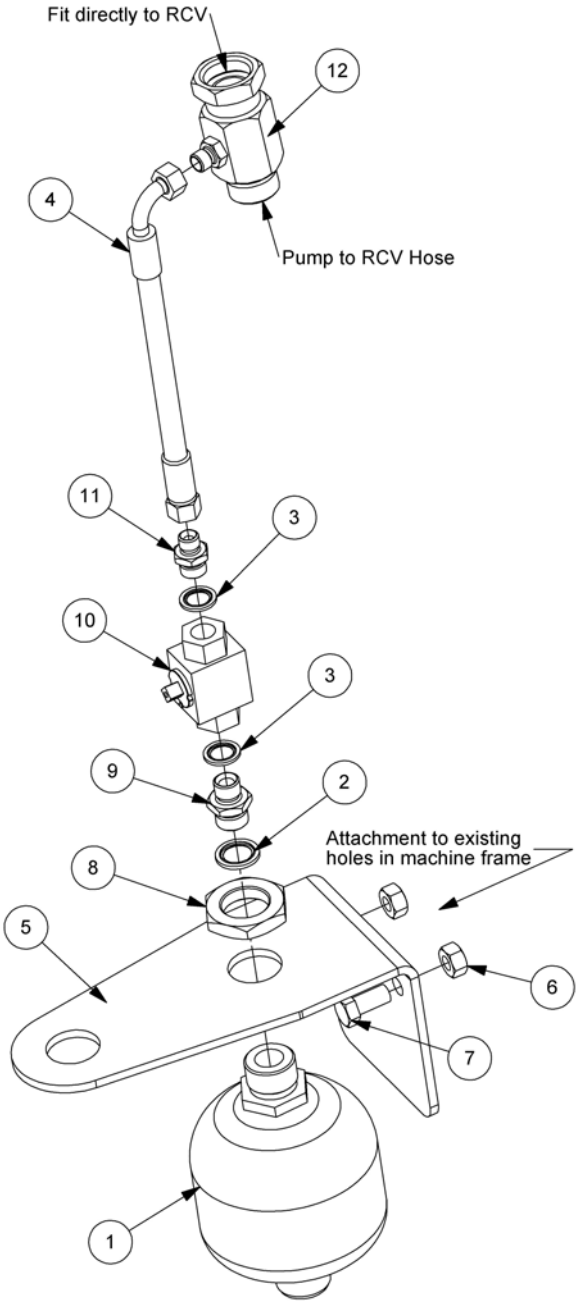

REF.	QTY.	PART No.	DESCRIPTION
		8126339	**FLAIL ACCUMULATOR KIT - PA55/60 Models**
1	1	41451.02	ACCUMULATOR
2	1	8650104	BONDED SEAL
3	2	8650103	BONDED SEAL
4	1	10.002.11	HOSE - 1/4" BSP FS/F90 x 550mm
5	1	8126330	ACCUMULATOR BRACKET
6	2	9143006	SELF-LOCKING NUT
7	2	9313056	SETSCREW
8	1	42244.01	LOCKNUT
9	1	6000112	ADAPTOR
10	1	08.200.01	VALVE - ISOLATING
11	1	8581115	ADAPTOR
12	1	04.056.33	ADAPTOR TEE

LIFT FLOAT KIT – Cable (Optional)

Module:
8126336

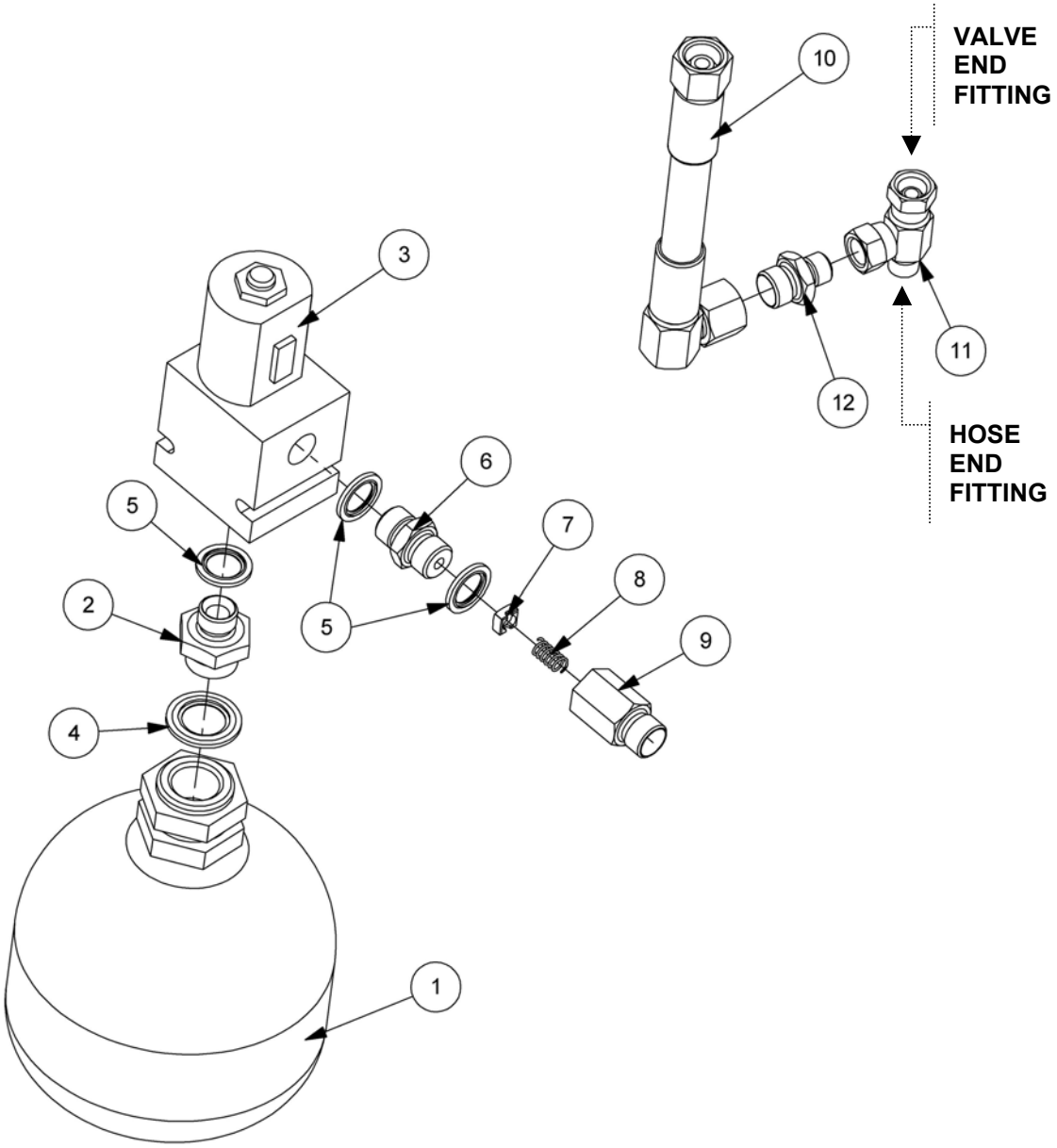

LIFT FLOAT KIT – Cable (Optional)

REF.	QTY.	PART No.	DESCRIPTION
		8126336	**LIFT FLOAT KIT - CABLE**
1	1	8126044	ACCUMULATOR
2	1	G2410380	ADAPTOR
3	1	08.619.09	VALVE - MODULAR
4	1	8650322	BONDED SEAL
5	3	8650103	BONDED SEAL
6	1	8581209	ADAPTOR
7	1	8123041	RESTRICTOR DISC - 1.15 RED
8	1	8116011	SPRING
9	1	8581346	ADAPTOR RESTRICTOR BODY
10	1	10.004.18	HOSE - 3/8"BSP FS/F90 x 900MM LONG
11	1	8581288	ADAPTOR TEE
12	1	8581115	ADAPTOR
13	1	8402208	SWITCH KIT - *not illustrated*

LIFT FLOAT KIT – Electric (Optional)

Module:
8126335

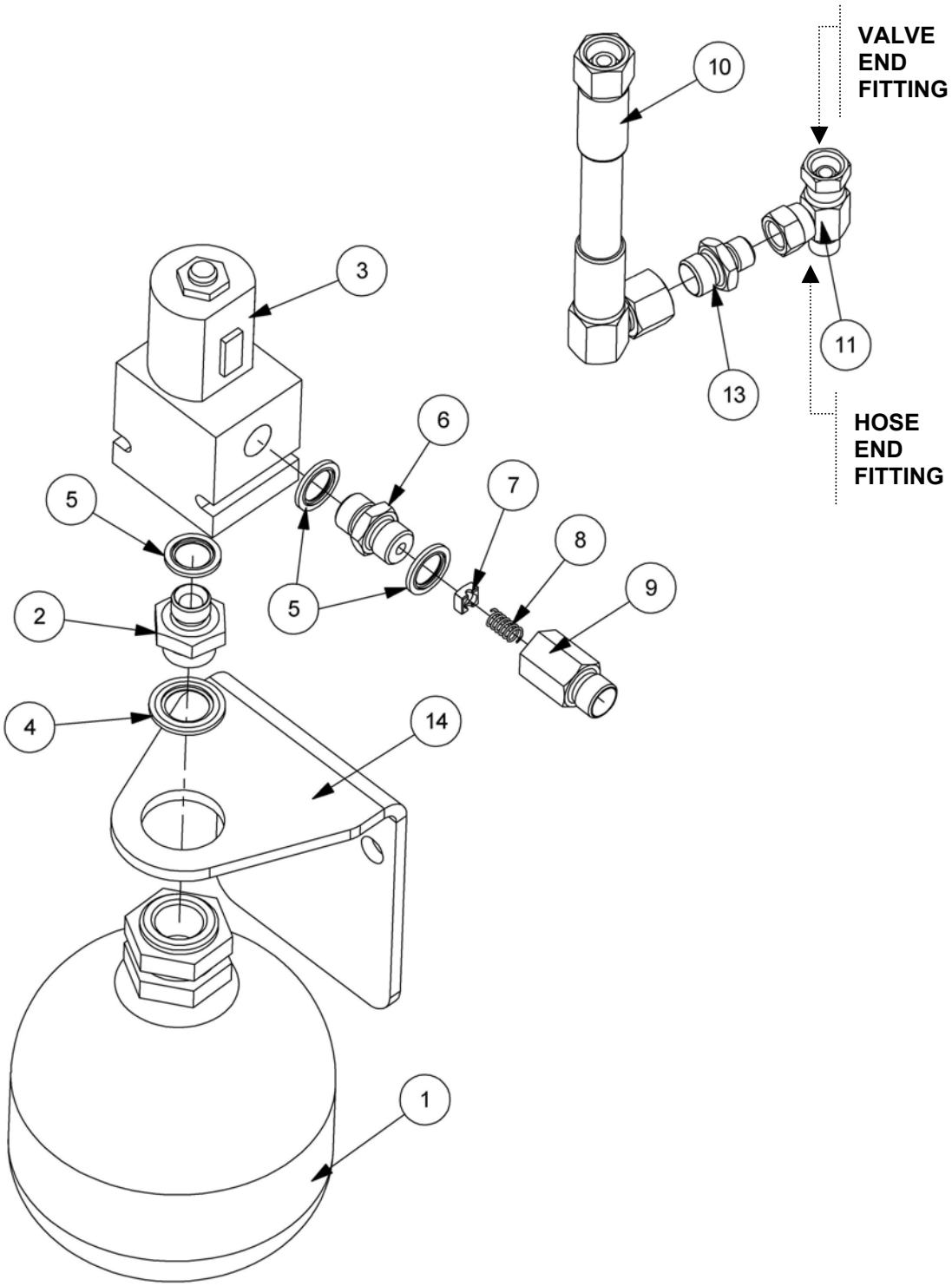

LIFT FLOAT KIT – Electric (Optional)

REF.	QTY.	PART No.	DESCRIPTION
		8126335	**LIFT FLOAT KIT - ELECTRIC**
1	1	8126044	ACCUMULATOR
2	1	G2410380	ADAPTOR
3	1	08.619.09	VALVE - MODULAR
4	1	8650322	BONDED SEAL
5	3	8650103	BONDED SEAL
6	1	8581209	ADAPTOR
7	1	8123041	RESTRICTOR DISC - 1.15 RED
8	1	8116011	SPRING
9	1	8581346	ADAPTOR RESTRICTOR BODY
10	1	10.004.16	HOSE - 3/8" BSP FS/F90 x 800MM LONG
11	1	8581288	ADAPTOR TEE
12	1	8402207	LOOM - *not illustrated*
13	1	8581115	ADAPTOR
14	1	8126318	BRACKET - FLOAT KIT

ANGLING RAM ASSEMBLY

Module:
43317.07

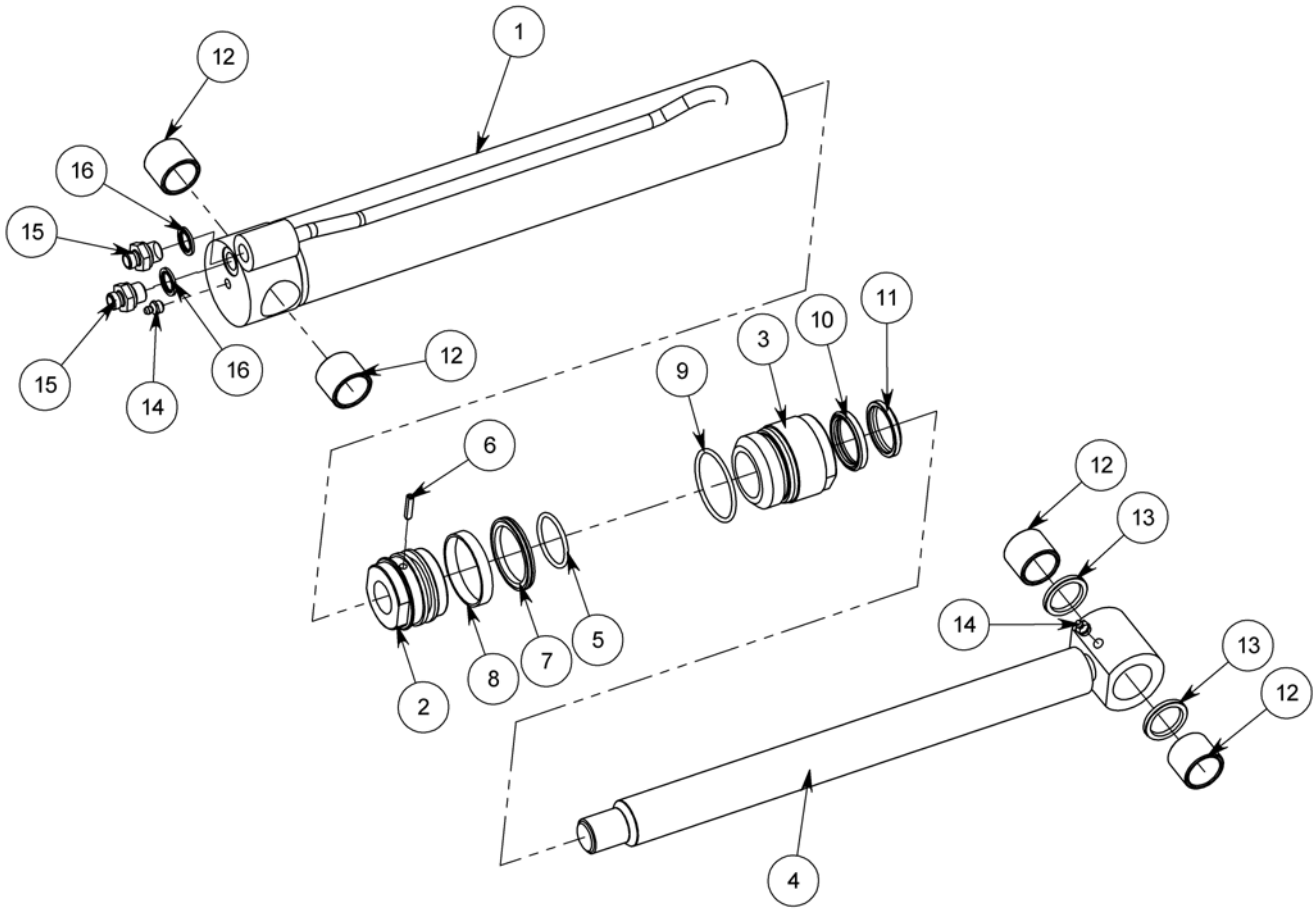

REF.	QTY.	PART No.	DESCRIPTION
		43317.07	**ANGLING RAM ASSEMBLY**
1	1	43317.33	BARREL
2	1	43317.31	PISTON
3	1	43317.32	GLAND HOUSING
4	1	43317.35	PISTON ROD
5	1	8600301	O RING
6	1	42775.01	DOWEL
7	1	8629156	PISTON SEAL
8	1	8629157	PISTON GUIDE RING
9	1	8600306	O RING
10	1	8629225	ROD GLAND SEAL
11	1	8629208	ROD SCRAPER RING
12	4	08.297.04	BUSH
13	2	8629218	SEAL
14	2	0901121	GREASER
15	2	8581115	ADAPTOR
16	2	8650103	BONDED SEAL

LIFT RAM ASSEMBLY

Module:
45895.02 – Standard Build
45895.07 – EDS Build

Illustrated in Standard Build

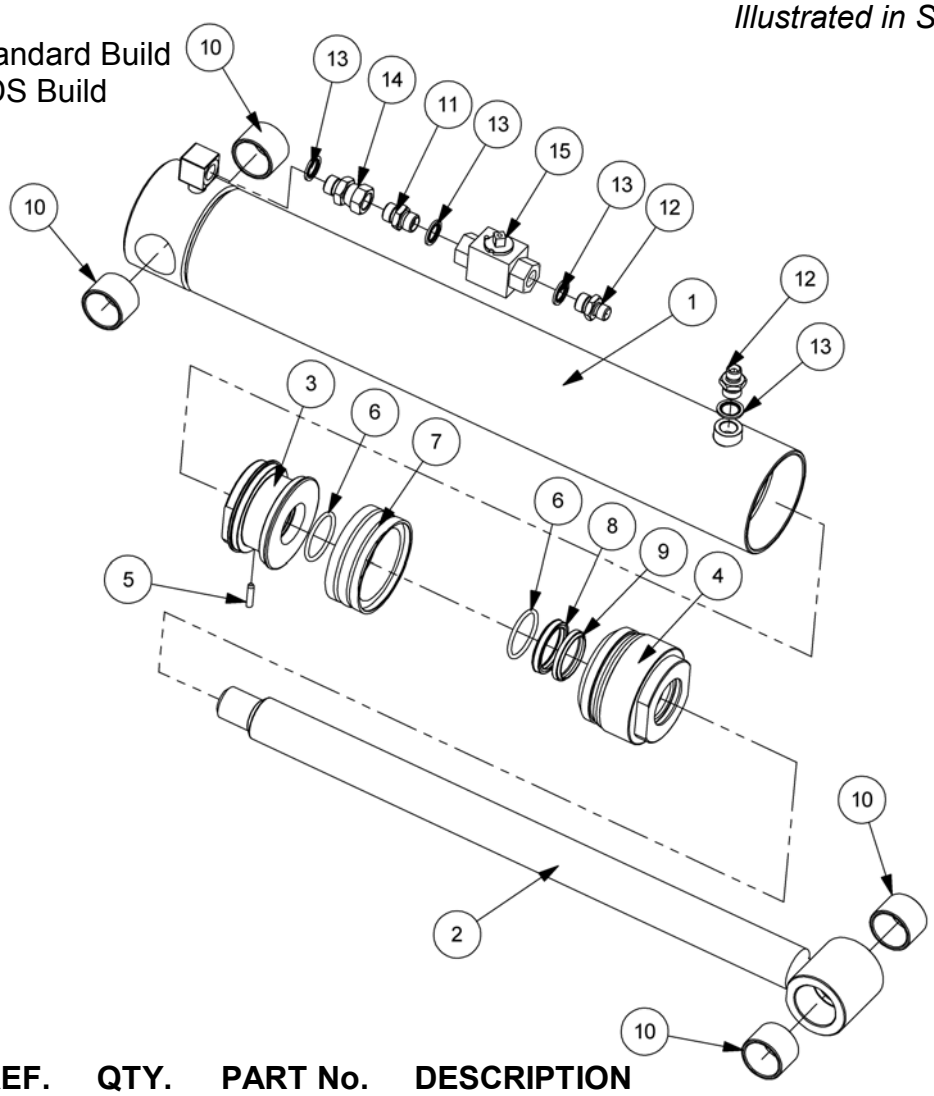

REF.	QTY.	PART No.	DESCRIPTION
		45895.02	**LIFT RAM ASSEMBLY - Std. Models**
		45895.07	**LIFT RAM ASSEMBLY - EDS Models**
		45895.04	BASIC RAM ASSEMBLY - Std. Build
		45895.06	BASIC RAM ASSEMBLY - EDS Build
1	1	45895.31	BARREL - Std. Build
*	1	45895.41	BARREL - EDS Build
2	1	45275.02	PISTON ROD
3	1	43315.31	PISTON
4	1	43315.32	GLAND HOUSING
5	1	42775.01	DOWEL
6	2	8600301	O RING
7	1	8638742	PISTON SEAL
8	1	8629225	GLAND SEAL
9	1	8629208	SCRAPER RING
*	1	8600742	O RING - *EDS Build only*
10	4	08.297.05	BUSH
11	1	6000113	ADAPTOR
12	2	8581115	ADAPTOR
13	4	8650103	BONDED SEAL
14	1	8581178	ADAPTOR
15	1	08.200.01	ISOLATING VALVE
*	1	05.433.01	PLUG - *EDS Build only*

* Not illustrated

REACH RAM ASSEMBLY – PA55

Module:
45288.03

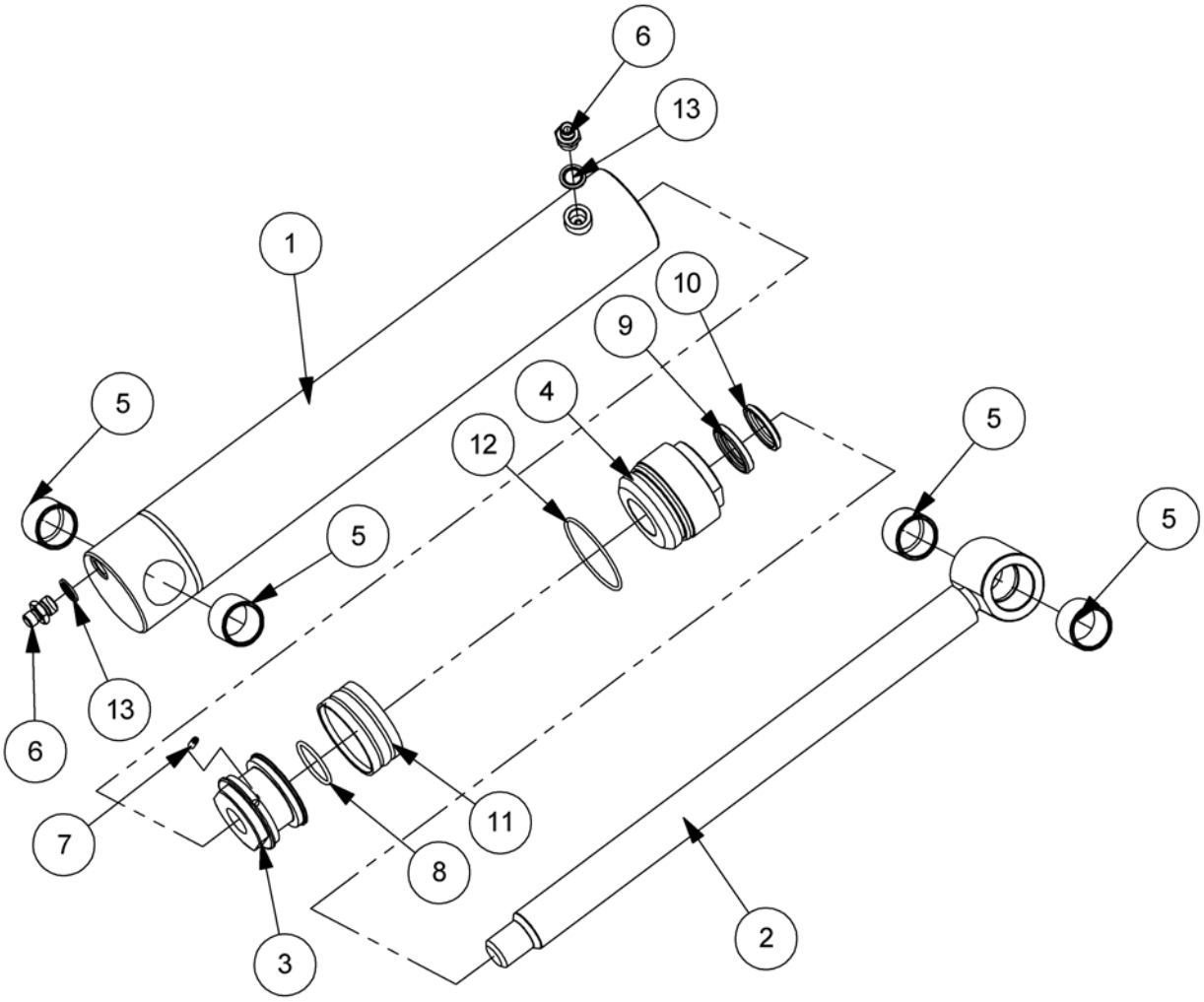

REF.	QTY.	PART No.	DESCRIPTION
		45288.03	**REACH RAM ASSEMBLY**
1	1	45273.02	REACH RAM BARREL
2	1	45275.03	PISTON ROD
3	1	43316.31	PISTON
4	1	43316.32	GLAND HOUSING
5	4	08.297.05	BUSH
6	2	8581115	ADAPTOR
7	1	42775.01	DOWEL
8	1	8600301	O RING
9	1	8629225	GLAND SEAL
10	1	8629208	SCRAPER RING
11	1	8638740	PISTON SEAL
12	1	8700740	O RING 740
13	2	8650103	BONDED SEAL

REACH RAM ASSEMBLY – PA60

Module:
21340.01

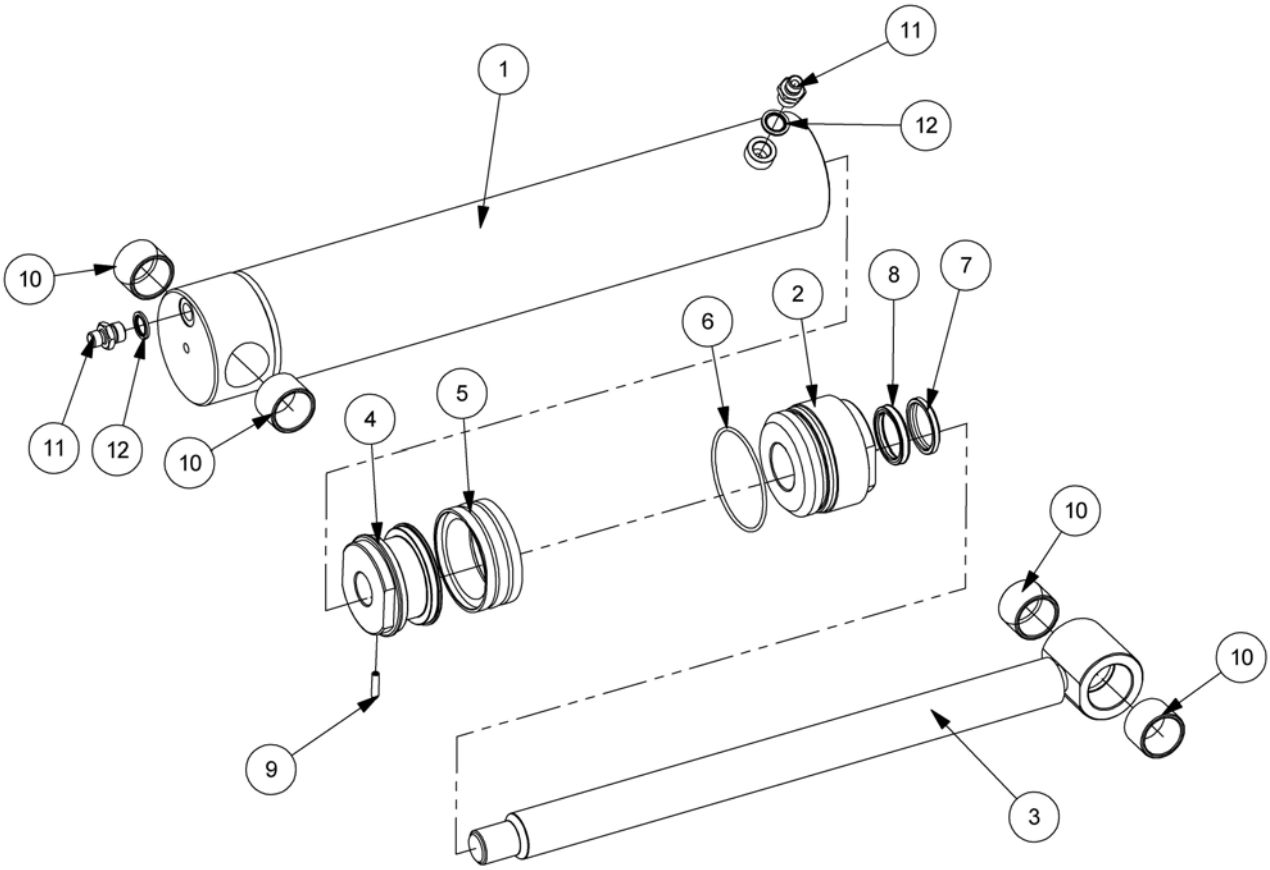

REF.	QTY.	PART No.	DESCRIPTION
		21340.01	**REACH RAM ASSEMBLY**
1	1	21340.31	RAM BARREL
2	1	43315.32	GLAND HOUSING
3	1	21340.34	PISTON ROD
4	1	43315.31	PISTON
5	1	8638742	PISTON SEAL
6	1	8600742	O RING
7	1	8629208	SCRAPER RING
8	1	8629225	GLAND SEAL
9	1	42775.01	DOWEL
10	4	08.297.05	BUSH
11	2	8581115	ADAPTOR
12	2	8650103	BONDED SEAL

SLEW RAM ASSEMBLY

Module:
45910.04

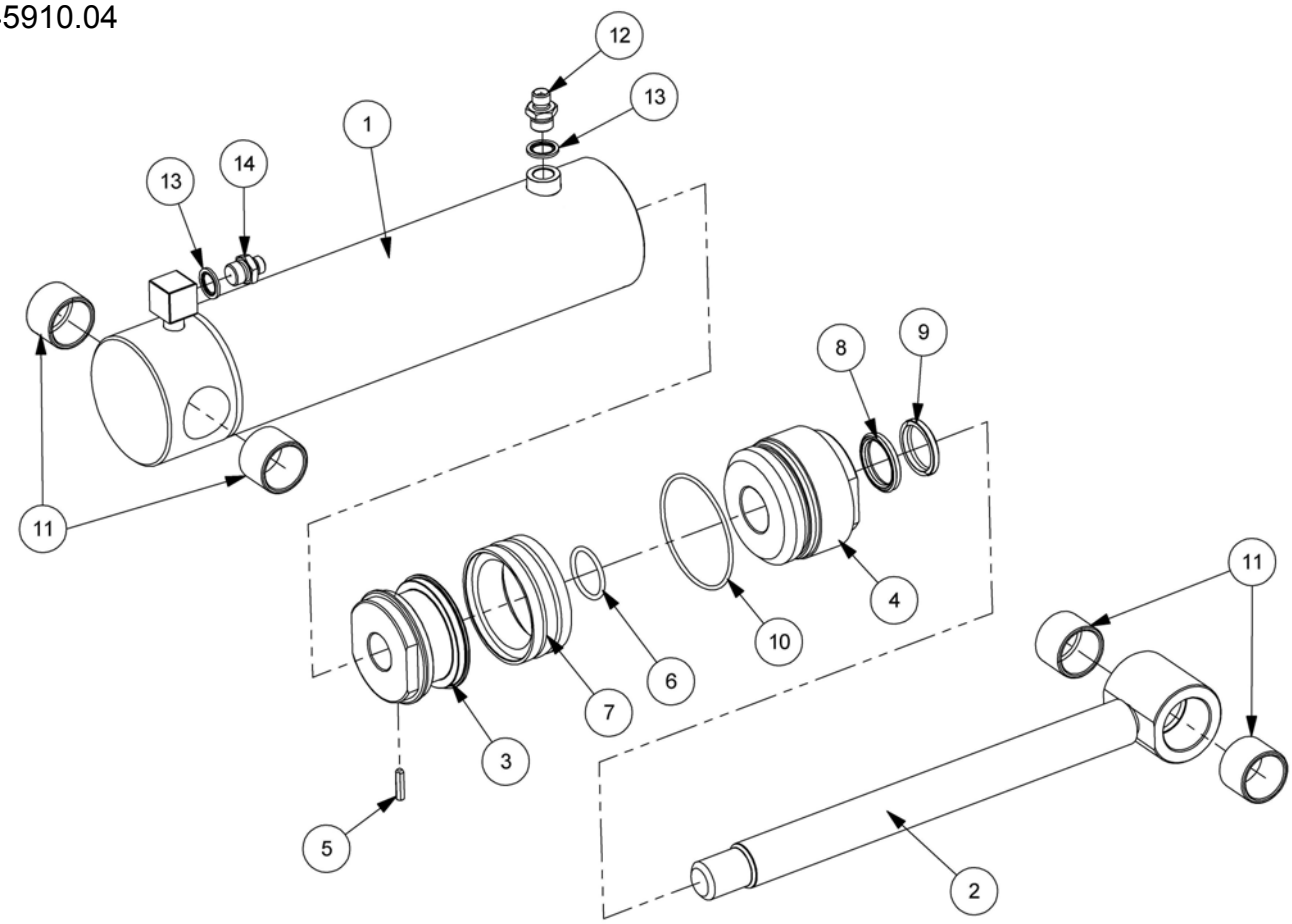

REF.	QTY.	PART No.	DESCRIPTION
		45910.04	**SLEW RAM ASSEMBLY**
1	1	45910.35	BARREL
2	1	45910.37	RAM ROD
3	1	45910.33	PISTON
4	1	45910.34	GLAND HOUSING
5	1	42775.01	DOWEL
6	1	8600125	O RING
7	1	8638742	PISTON SEAL
8	1	8629210	GLAND SEAL
9	1	8629211	WIPER SEAL
10	1	8600742	O RING
11	4	08.297.05	BUSH
12	1	8581115	ADAPTOR
13	2	8650103	BONDED SEAL
14	1	8130066	ADAPTOR RESTRICTOR
		8699254	**SEAL KIT**

FOLD RAM ASSEMBLY - Midcut

Module:
43317.08

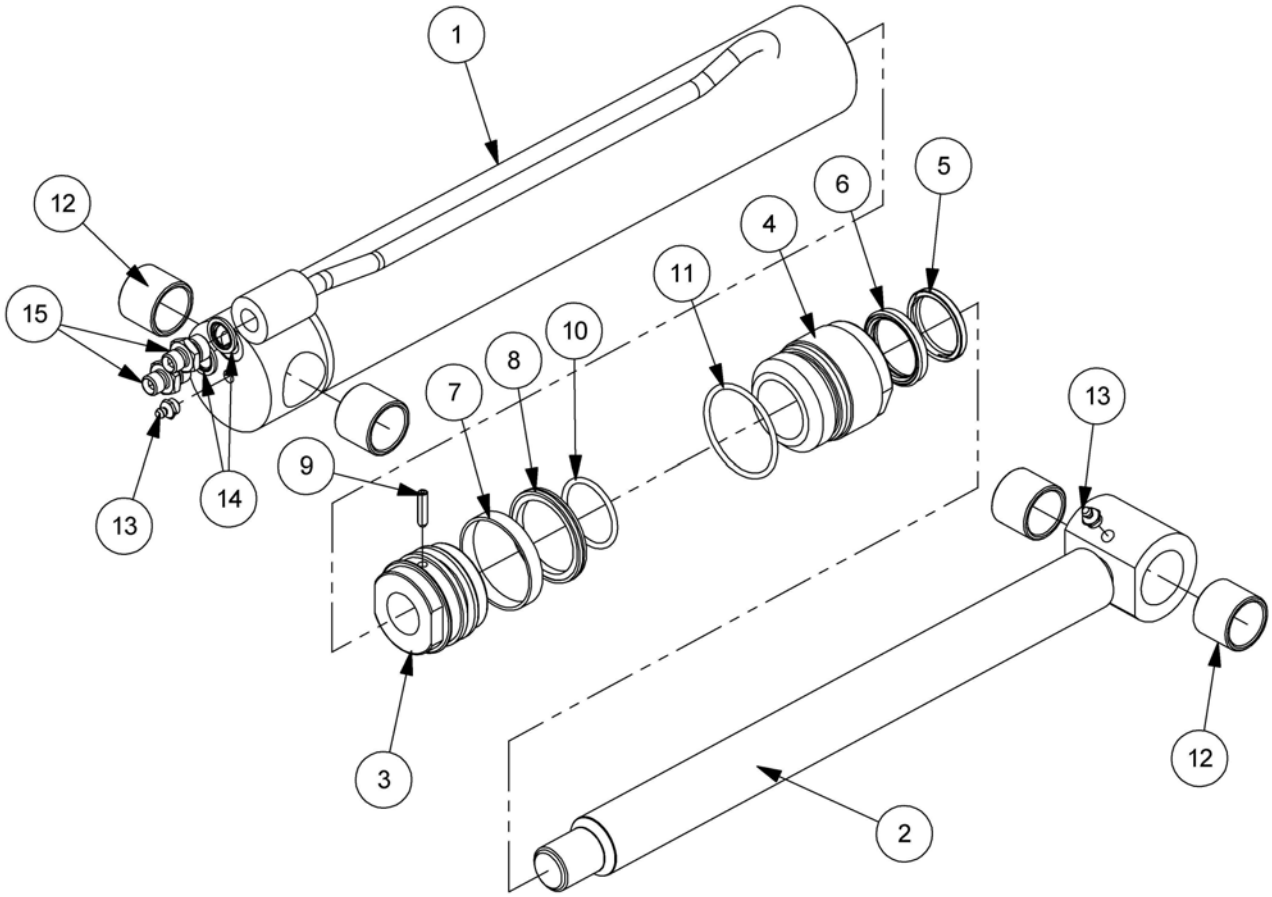

REF.	QTY.	PART No.	DESCRIPTION
		43317.08	**FOLD RAM ASSEMBLY**
1	1	43317.40	BARREL
2	1	43317.43	PISTON ROD
3	1	43317.31	PISTON
4	1	43317.32	GLAND HOUSING
5	1	8629208	SCRAPER RING
6	1	8629225	GLAND SEAL
7	1	8629157	GUIDE RING
8	1	8629156	PISTON SEAL
9	1	42775.01	DOWEL
10	1	8600301	O RING
11	1	8600306	O RING
12	4	08.297.04	BUSH
13	2	0901121	GREASE NIPPLE
14	2	8650103	BONDED SEAL
15	2	8581115	ADAPTOR
		43317.01	**SEAL KIT**

SWITCHBOX CONTROLS & LOOM

Modules:
8402901 – Cable Rotor Control
8402902 – Electric Rotor Control

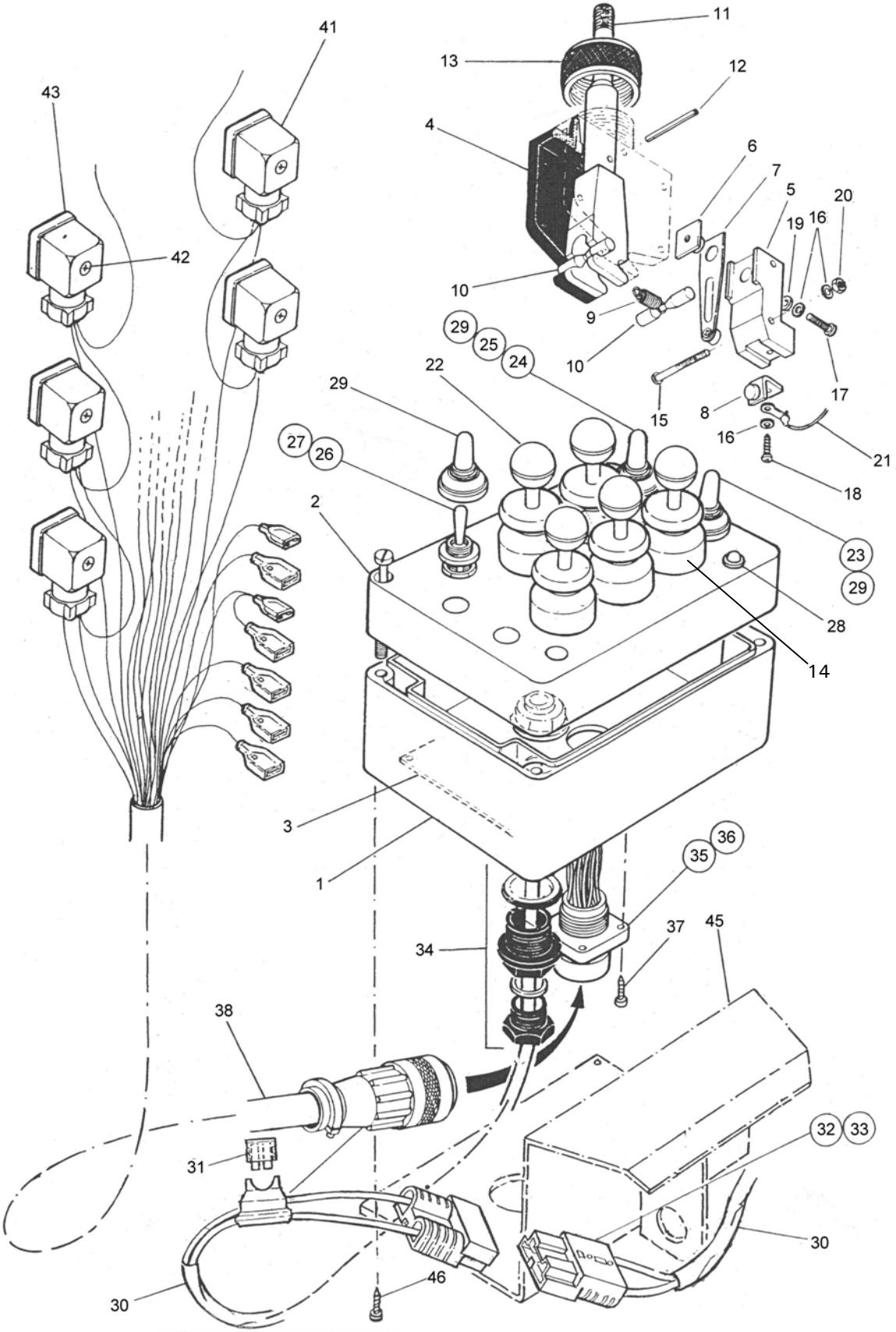

SWITCHBOX CONTROLS & LOOM

REF.	QTY.	PART NO.	DESCRIPTION
		41845.03	**MULTI 5 LEVER SWITCHBOX - Cable Rotor Control**
		41845.04	**MULTI 5 LEVER SWITCHBOX - Electric Rotor Control**
1	1	41845.32	BOX
2	1	41845.31	LID c/w SCREWS
3	1	41845.33	CIRCUIT BOARD
	5	8402122	LEVER SWITCH UNIT - *Comprising of:*
4	1	8402285	SWITCH BODY
5	2	8402106	CONTACT HOLDER
6	2	8402109	SPRING CONTACT RETAINER
7	2	8402113	SPRING CONTACT
8	2	8402108	FIXED CONTACT
9	1	8402101	SPRING
10	2	8402111	BAR
11	1	8402256	LEVER
12	1	0425320	SPRING DOWEL
13	1	8402051	BEZEL RING
14	1	8402022	LEVER GAITER
15	4	9200006	SCREW - POSIDRIVE PANHEAD
16	8	9100400	EXTERNAL SERRATED WASHER
17	2	9200005	SCREW - POSIDRIVE PANHEAD
18	2	8402119	SELFTAPPING SCREW
19	2	8402280	PLAIN WASHER
20	2	9113000	NUT - PLATED
21	5	41845.34	LOOM - LEVER SWITCH
22	5	8402056	KNOB - BLACK
23	1	8402023	SWITCH - POWER ON/OFF
24	1	8402182	SWITCH - SLEW/AUTO RESET
25	1	41845.35	LOOM - SLEW/AUTO RESET SWITCH
26	1	8402197	SWITCH - FLOAT
27	1	41845.37	LOOM - FLOAT SWITCH
28	1	41845.41	L.E.D. AND LOOM
29	3	8402024	WEATHER GAITER
30	1	8402232	POWER LOOM - *Including:*
31	1	43034.02	FUSE
32	2	8402230	CONTACTS HOUSING
33	4	8402229	CONTACTS
34	1	8402042	GLAND
35	1	8402189	SOCKET SHELL
36	17	8402192	PIN SOCKET
37	4	2800203	SCREW
38	1	41844.01	WIRING LOOM - *Including:*
39	1	8402188	SHELL
40	1	8402190	CABLE CLAMP
41	12	07.835.04	PLUG - *Including:*
42	1	07.835.03	SCREW
43	1	07.835.02	GASKET
44	1	8402193	SPECIAL TOOL
45	1	8402345	MOUNTING BRACKET
46	4	2800243	SELFTAPPING SCREW

MONOLEVER CONTROLS & LOOM

Modules:
8402905
8402906 – Electric Rotor Reverse

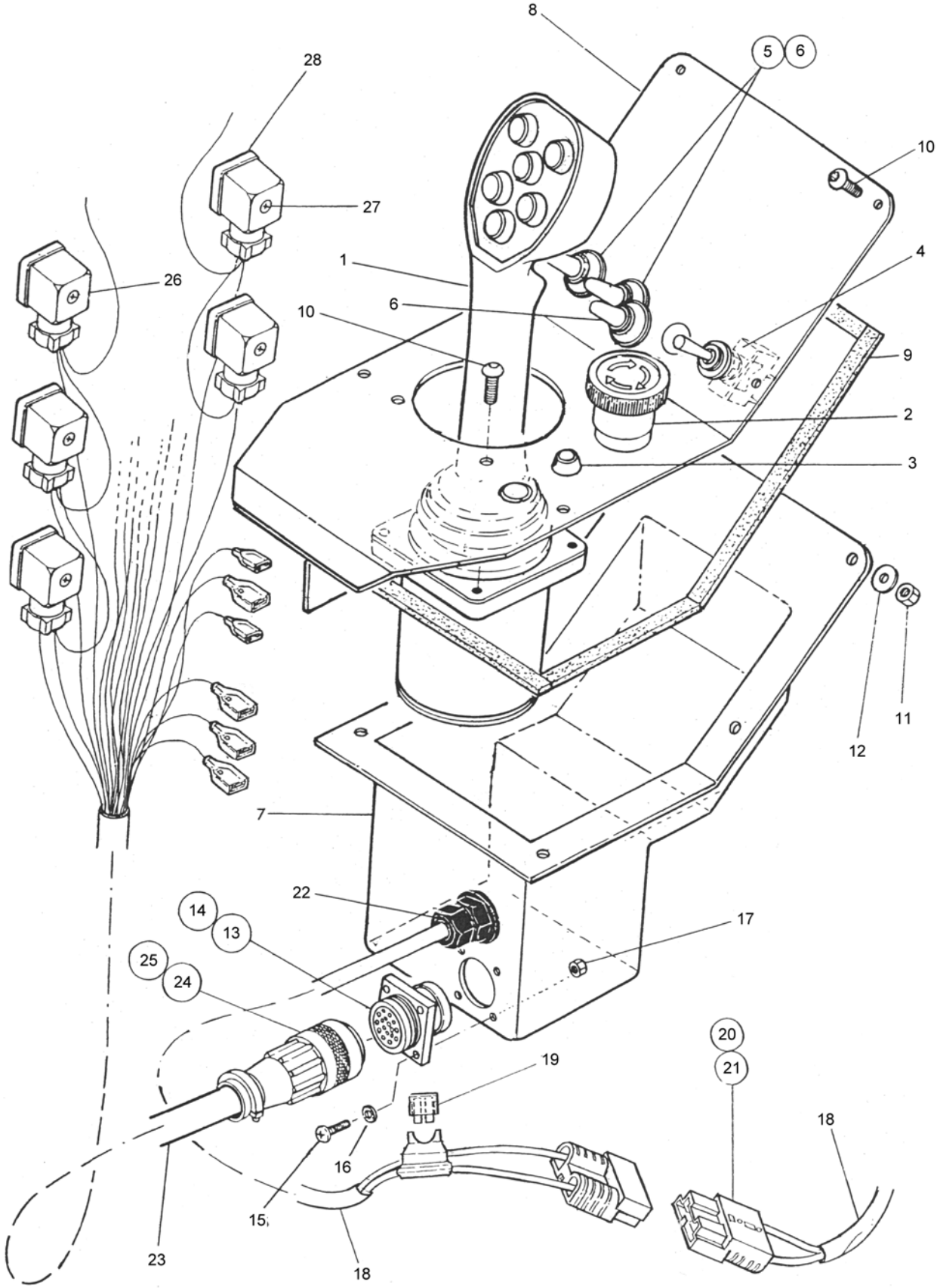

MONOLEVER CONTROLS & LOOM

REF.	QTY.	PART NO.	DESCRIPTION
		8402905	**MONOLEVER 6 BUTTON CONTROL ASSEMBLY**
		8402906	**MONOLEVER WITH ELECTRIC ROTOR REVERSE**
		41590.03	**MONOLEVER 6 BUTTON UNIT**
		41590.05	**MONOLEVER UNIT - with Electric Rotor Reverse**
1	1	41590.32	JOYSTICK - *Including Circuit Board*
2	1	8402184	POWER ON / EMERGENCY STOP
3	1	8402174	L.E.D. MAIN POWER ON
4	1	8402182	SWITCH - SLEW / AUTO RESET
5	2	8402023	SWITCH - LIFT AND ANGLE FLOAT
6	3	8402024	WEATHER COVER
7	1	7550300	COVER POD
8	1	7550339	TOP PLATE
9	1	7290052	SEALING STRIP *(Cut to suit)*
10	10	9300125	SCREW - BUTTON HEAD
11	6	9143003	SELF LOCKING NUT
12	6	9100103	WASHER
13	1	8402189	SOCKET SHELL
14	14	8402192	FEMALE SOCKET PIN
15	4	9200007	SCREW - POSIDRIVE PANHEAD
16	4	9100400	EXTERNAL SERRATED WASHER
17	4	9100013	NUT - PLATED
18	1	8402232	POWER LOOM - *Including:*
19	1	43034.03	FUSE
20	2	8402230	CONTACT HOUSING
21	4	8402229	CONTACTS
22	1	8402042	GLAND
23	1	41844.01	WIRING LOOM - *Including:*
24	1	8402188	SHELL
25	1	8402190	CABLE CLAMP
26	12	07.835.04	PLUG - *Including:*
27	1	07.835.03	SCREW
28	1	07.835.02	GASKET
29	1	8402193	SPECIAL TOOL

PROP. ARMREST CONTROLS (v.3)

Modules:
43022.20 – Proportional Std.
43022.21 – Proportional EDS

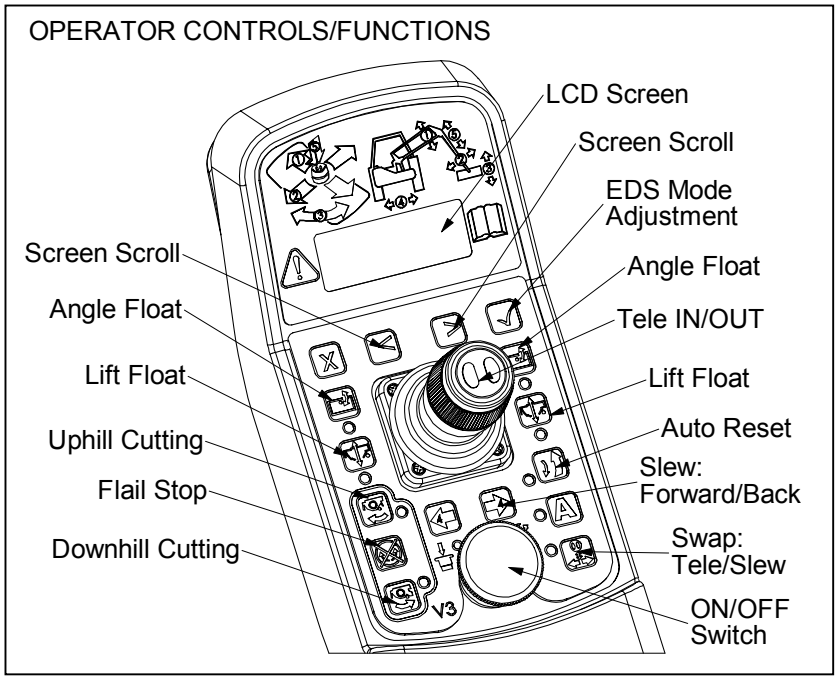

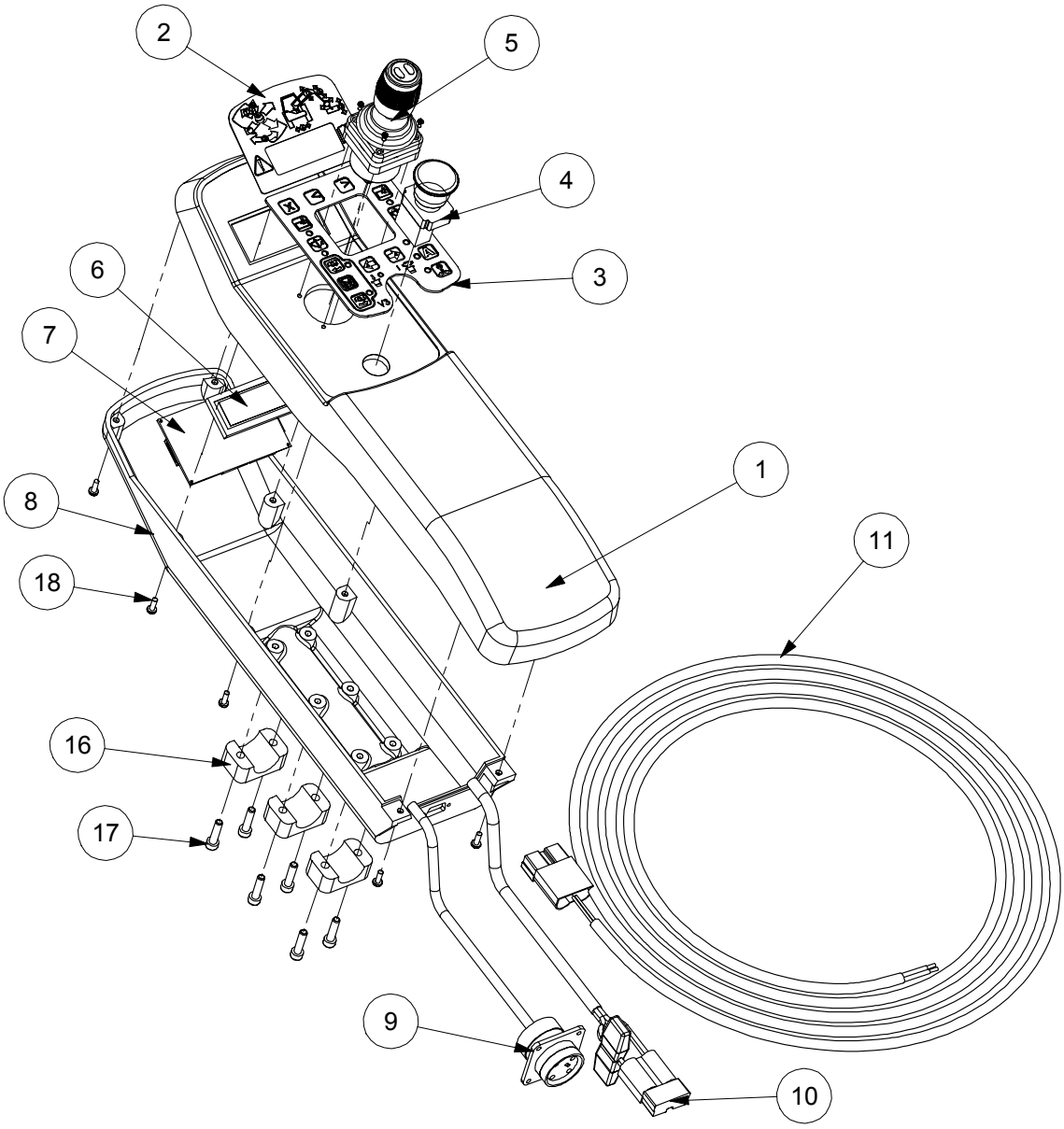

PROP. ARMREST CONTROLS (v.3)

REF.	QTY.	PART No.	DESCRIPTION
		43022.20	**v.3 PROPORTIONAL ARMREST CONTROLS - Std.**
		43022.21	**v.3 PROPORTIONAL ARMREST CONTROLS - EDS**
1	1	43022.324	ARMREST LID - GREY
2	1	43022.50	FRONT DECAL
3	1	43022.51	JOYSTICK KEYPAD
4	1	41786.33	SWITCH - EMERGENCY STOP
5	1	45710.96	JOYSTICK - inc. fixing screws
6	1	43022.52	LCD SCREEN
7	1	43022.53	CIRCUIT BOARD
8	1	43022.321	ARMREST BASE - YELLOW
9	1	43022.46	CONNECTOR & LEAD
10	1	43022.47	CONNECTOR & POWER LEAD (2 FUSES)
11	2	8402237	LOOM - POWER SUPPLY
12	2	8402149	GLAND
13	1	43022.39	CONNECTOR 9 WAY
14	1	8600119	O RING - not illustrated
15	1	8402239	PUSH ON COVER - not illustrated
16	3	30.209.71	PIPE CLAMP
17	6	9343053	CAPSCREW
18	8	9300132	PANHEAD SCREW

AUXILIARY BOX

Module:
21164.03

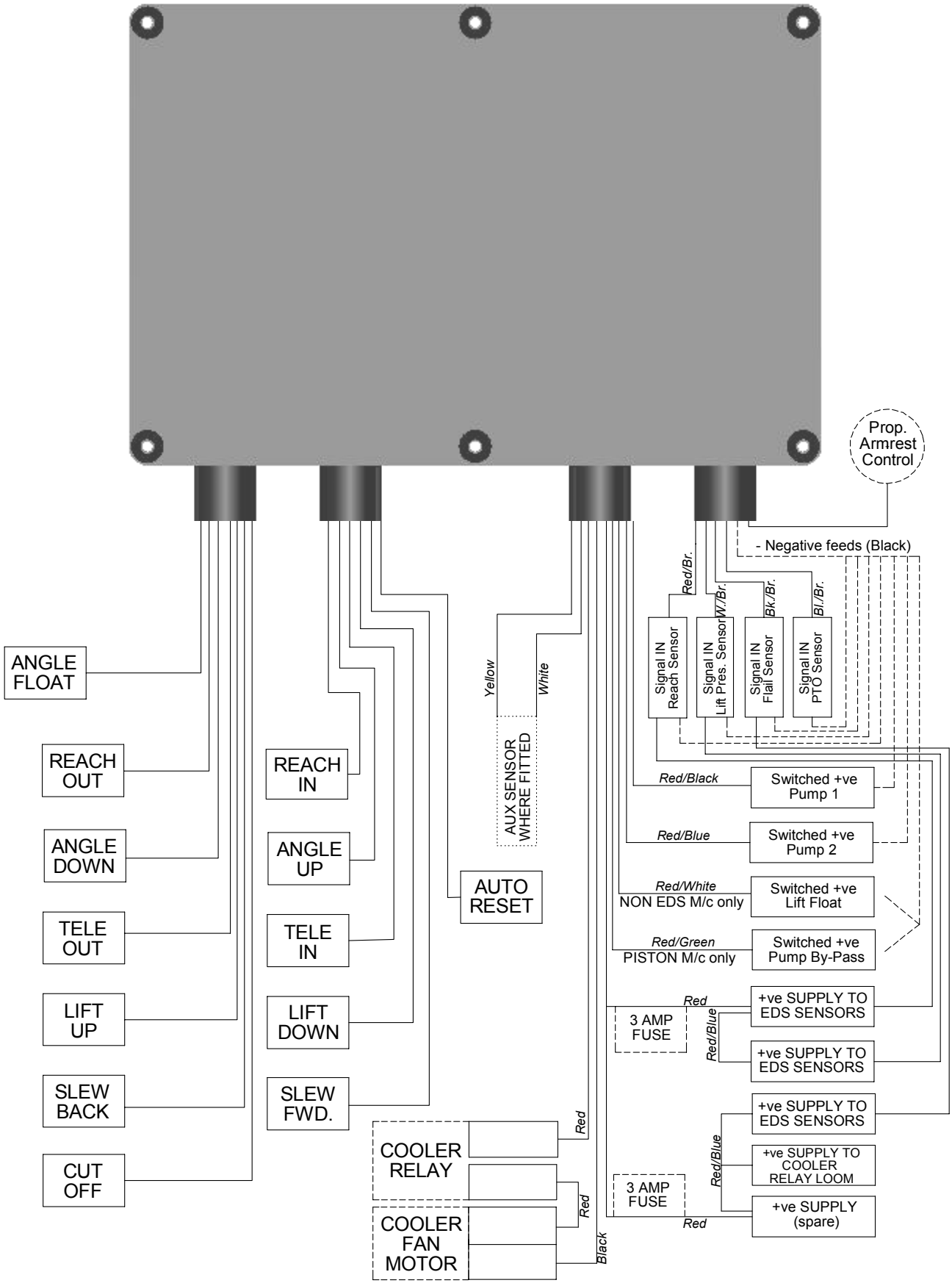

HYDRAULIC SUNDRIES

REF.	QTY.	PART No.	DESCRIPTION
			HYDRAULIC INSTALLATION SUNDRIES
1	1	8501218	1-1/2" BORE HOSE - 600MM LONG
2	4	0904107	HOSE CLIPS 40-55MM
3	2	8582058	BLANKING CAP
4	3	7135084	HOSE TIE - 180MM LONG
5	4	7196045	HOSE TIE - 350MM LONG
6	1	00999588	* HOSE SLEEVING - 1000MM LONG
7	1	00999588	** HOSE SLEEVING - 1200MM LONG
8	2	05.434.01	ADAPTER

* Main Arm to Dipper Pivot
** Main Arm to Valve

Note:
When ordering Hose Sleeving 00999588 please state length required.

CONTROL MOUNTINGS

Modules:
7313282 – Cable Controls *(Diagram A)*
7109319 – Electric Switchbox *(Diagram B)*
7313275 – Proportional Armrest *(Diagram C)*

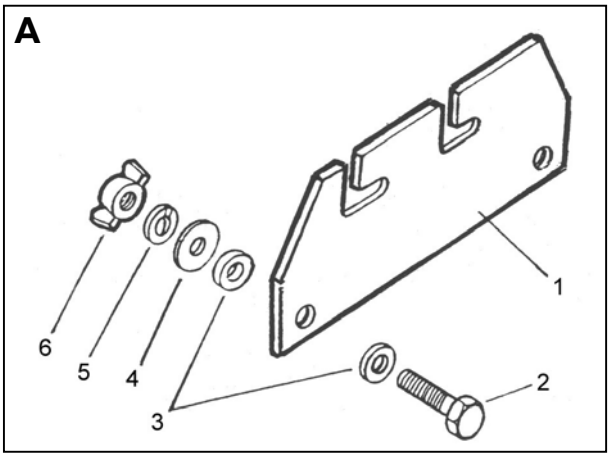

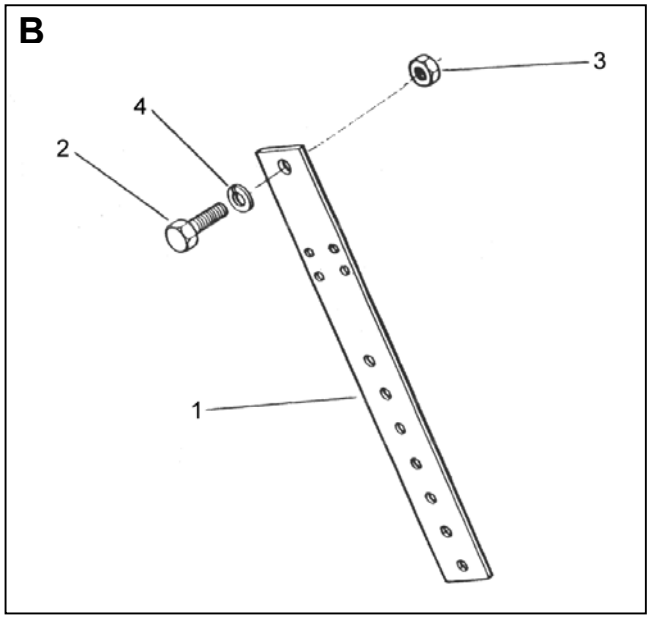

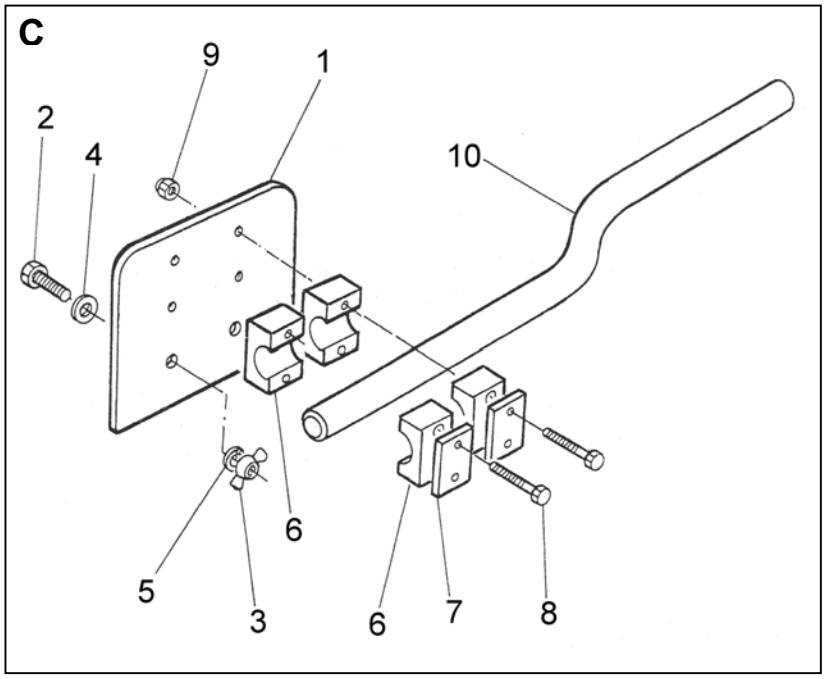

CONTROL MOUNTINGS

REF.	QTY.	PART NO.	DESCRIPTION
A		**7313282**	**CABLE CONTROL UNIT MOUNTING**
1	1	42491.01	BRACKET
2	2	9313094	SETSCREW
3	4	03.152.01	RUBBER WASHER
4	2	9100104	PLAIN WASHER
5	2	9100204	SPRING WASHER
6	2	9193004	WINGNUT

REF.	QTY.	PART NO.	DESCRIPTION
B		**7109319**	**ELECTRIC SWITCHBOX CONTROL MOUNTING**
1	1	7109146	PILLAR
2	1	9311086	SETSCREW
3	1	0111006	NUT
4	1	0100206	SPRING WASHER

REF.	QTY.	PART NO.	DESCRIPTION
C		**7313275**	**PROPORTIONAL CONTROL MOUNTING**
1	1	08.317.01	CONTROL MOUNTING BRACKET
2	2	9313054	SETSCREW
3	2	9193004	WINGNUT
4	2	9100104	PLAIN WASHER
5	2	9100204	SPRING WASHER
6	6	30.209.71	CLAMP
7	3	30.209.33	COVER PLATE
8	6	30.068.88	BOLT
9	4	9163003	SELF LOCKING NUT
10	1	42312.01	MOUNTING BAR

SENSOR KITS

Modules:
7556703 - EDS
7556707 - Power Monitor
7556710 - PTO

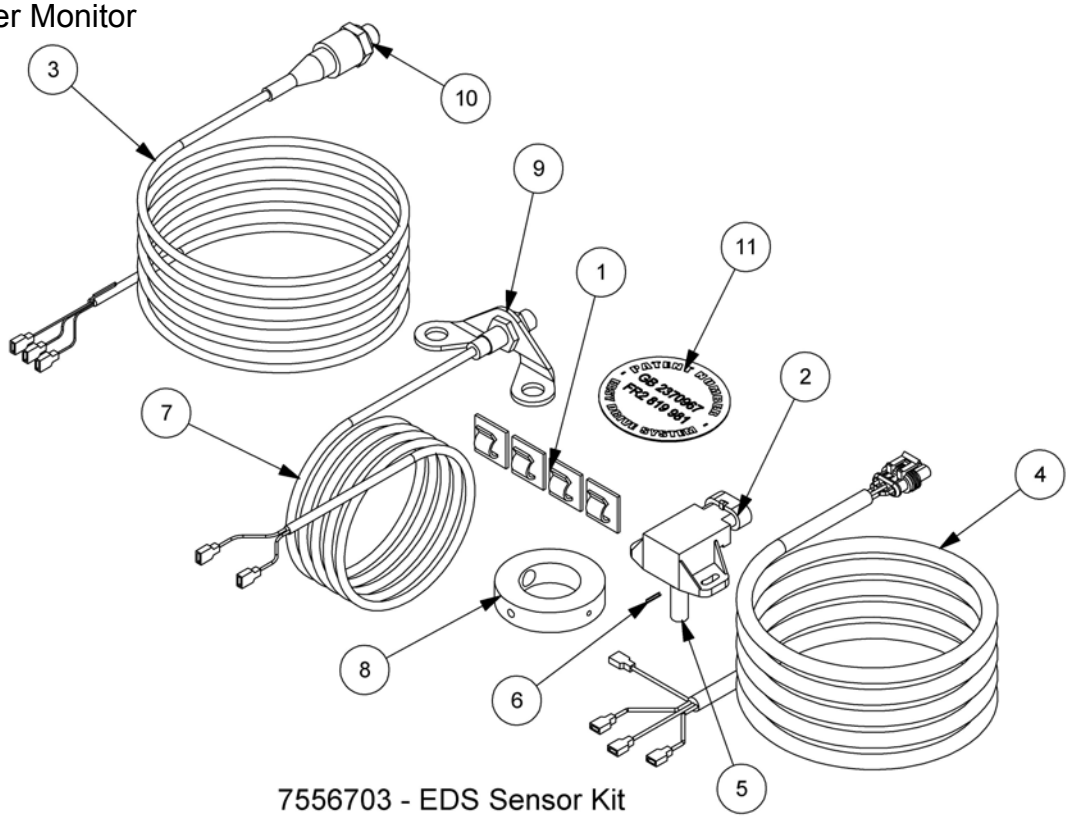

7556703 - EDS Sensor Kit

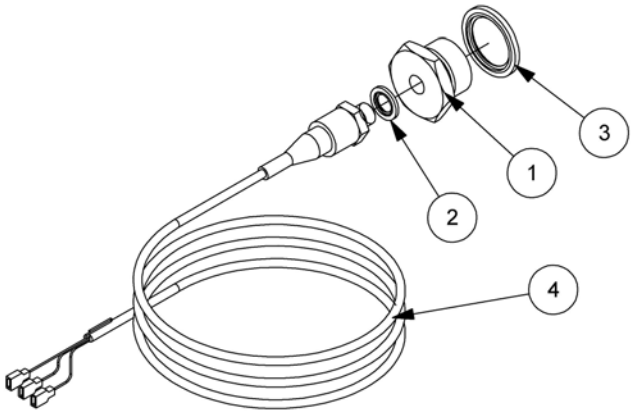

7556707 - Power Monitor Sensor Kit

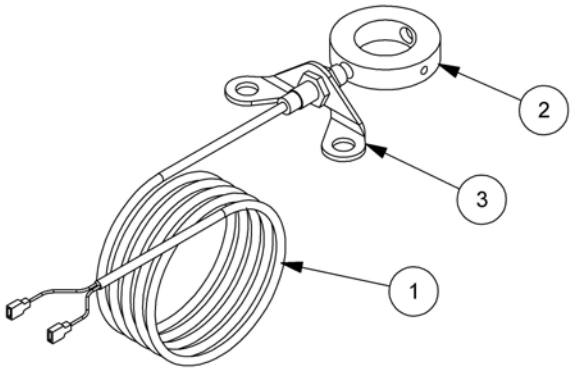

7556710 - PTO Sensor Kit

SENSOR KITS

REF.	QTY.	PART No.	DESCRIPTION
		7556703	**EDS SENSOR KIT - EDS**
1	4	43357.01	CLIP (SELF ADHESIVE PAD)
2	1	8402235	REACH SENSOR
3	1	8402253	PRESSURE SENSOR
4	1	21163.01	REACH SENSOR LOOM
5	1	45425.07	SENSOR EXTENSION
6	1	0430110	SPRING DOWEL
7	1	8402251	PTO SENSOR
8	1	8402252	PTO MAGNETIC RING
9	1	21170.04	PTO SENSOR BRACKET
10	1	8650102	BONDED SEAL
11	1	21365.01	PATENT DECAL

REF.	QTY.	PART No.	DESCRIPTION
		7556707	**POWER MONITOR SENSOR KIT**
1	1	8581451	ADAPTOR
2	1	8650102	BONDED SEAL
3	1	8650108	BONDED SEAL
4	1	8402257	PRESSURE SENSOR

REF.	QTY.	PART No.	DESCRIPTION
		7556710	**PTO SENSOR KIT**
1	1	8402251	PTO SENSOR
2	1	8402252	PTO MAGNETIC RING
3	1	21170.04	PTO SENSOR BRACKET

OVER CENTRE VALVE KIT

Module:
7452755

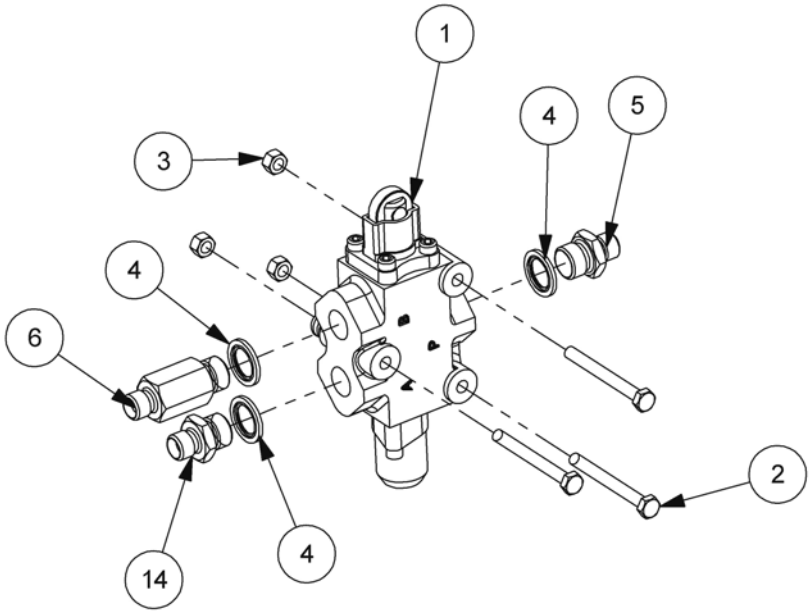

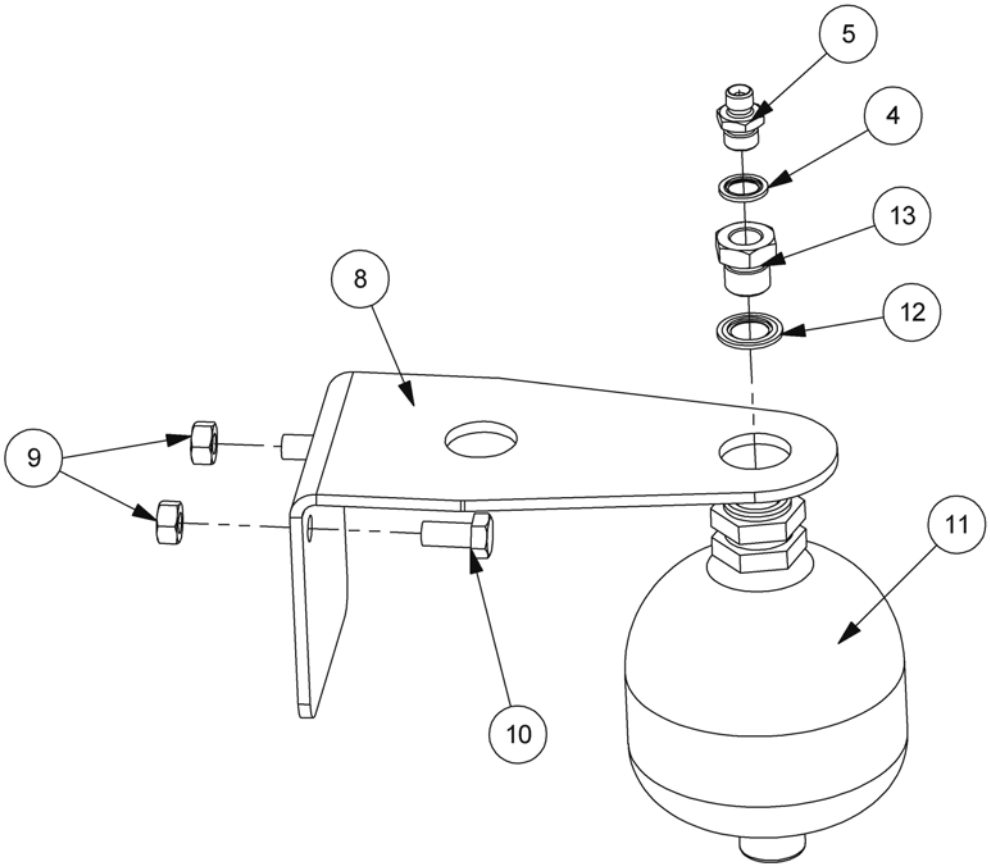

OVER CENTRE VALVE KIT

REF.	QTY.	PART No.	DESCRIPTION
		7452755	**OVER CENTRE VALVE KIT**
1	1	45913.02	CAM VALVE DIVERTER - 3 WAY
2	3	9213123	BOLT
3	3	9143003	SELF-LOCKING NUT
4	4	8650103	BONDED SEAL
5	2	8581115	ADAPTOR
6	1	8581146	ADAPTOR
7	6	9100103	FLAT WASHER
8	1	8126330	ACCUMULATOR BRACKET
9	2	9143006	SELF-LOCKING NUT
10	2	9313056	SETSCREW
11	1	8126044	ACCUMULATOR
12	1	8650322	BONDED SEAL
13	1	8581284	ADAPTOR
14	1	8130046	ADAPTOR RESTRICTOR

OIL COOLER ASSEMBLY

Modules:
7155764 – L/H Build
7155765 – R/H Build

Illustrated in Left Hand Build

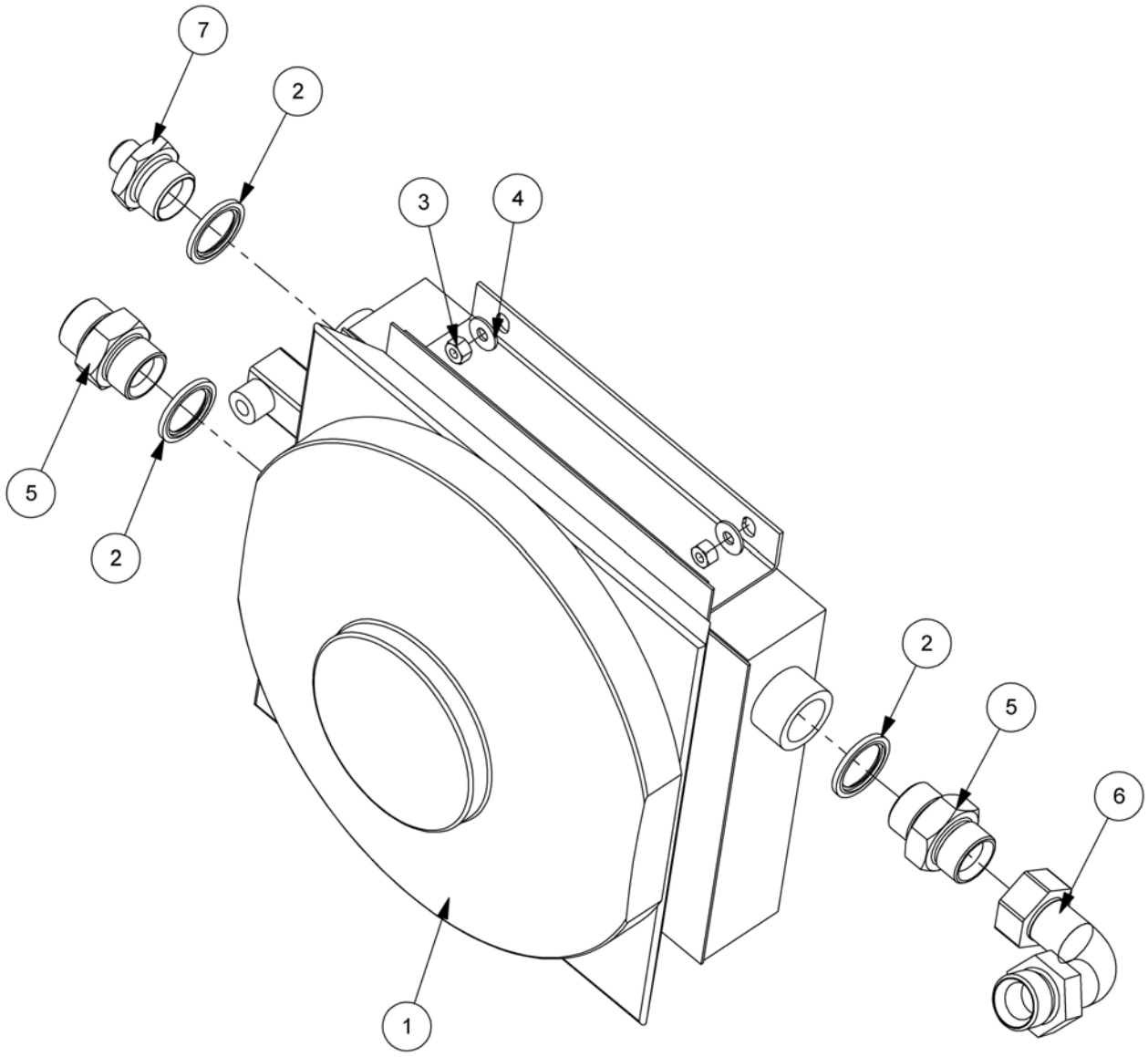

OIL COOLER ASSEMBLY

REF.	QTY.	PART No.	DESCRIPTION
		7155764	**OIL COOLER ASSEMBLY - L/H Build**
		7155765	**OIL COOLER ASSEMBLY - R/H Build**
1	1	8402380	OIL COOLER
2	3	8650108	BONDED SEAL
3	4	9143004	SELF-LOCKING NUT
4	4	9100104	FLAT WASHER
5	2	05.434.01	ADAPTOR
6	1	8581264	ADAPTOR - SWEPT 90°
7	1	8581129	ADAPTOR - L/H Build
	1	8581229	BULKHEAD UNION - R/H Build *(not illustrated)*
8	1	43177.38	LOOM - (*not illustrated)*

COVERS ASSEMBLY (with Cooler)

Modules: *Illustrated in Left Hand Build*

7155710 – L/H Build (Cooler Models)
7155711 – R/H Build (Cooler Models)

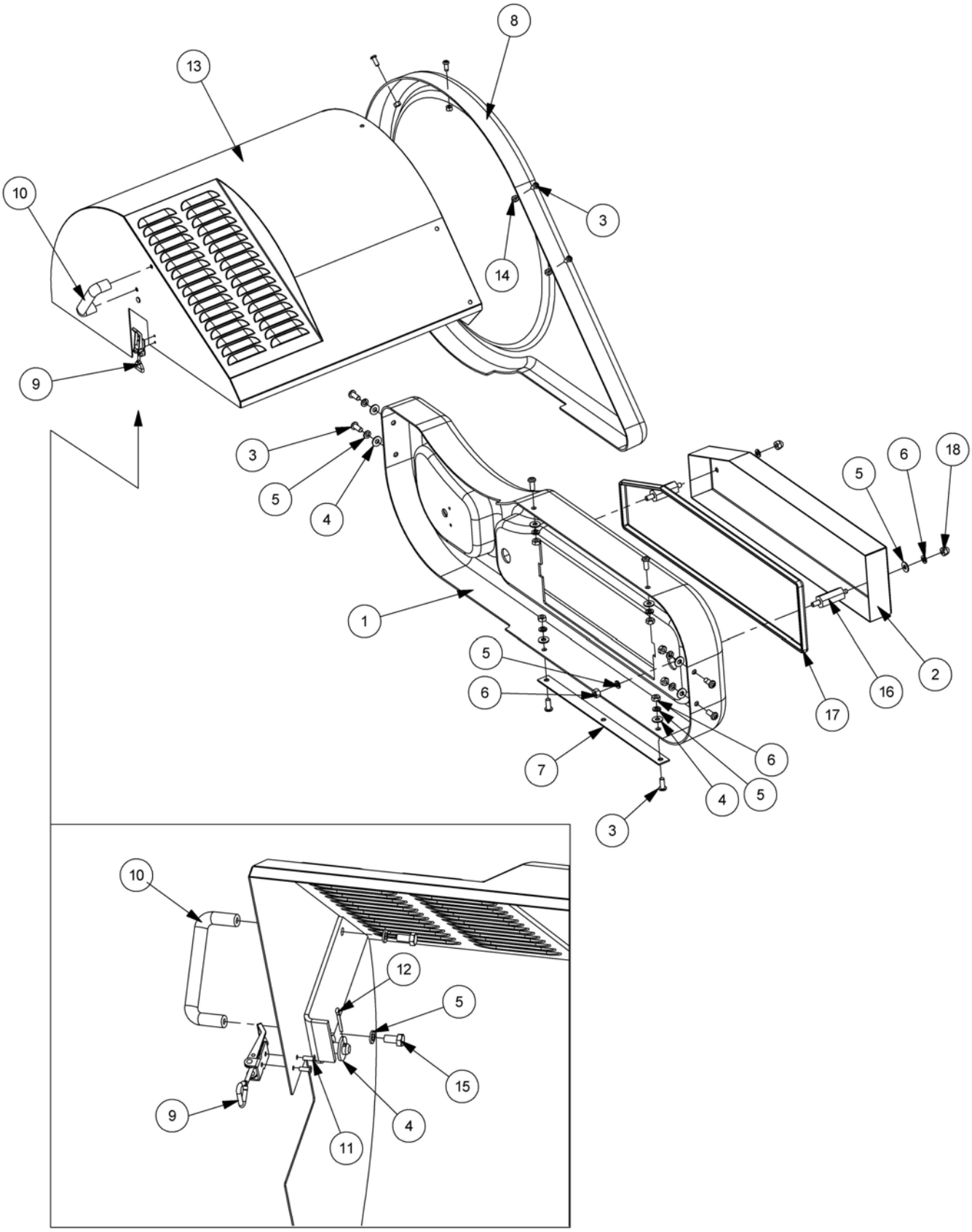

COVERS ASSEMBLY (with Cooler)

REF.	QTY.	PART No.	DESCRIPTION
		7155710	**COVERS ASSEMBLY - L/H Build with Cooler**
		7155711	**COVERS ASSEMBLY - R/H Build with Cooler**
1	1	21304.03	REAR COVER (LOWER) - L/H Build
	1	21304.04	REAR COVER (LOWER) - R/H Build
2	1	21312.02	COOLER BASKET - L/H Build
	1	21312.03	COOLER BASKET - R/H Build
3	15	9300154	SCREW
4	10	9100105	FLAT WASHER
5	11	9100205	SPRING WASHER
6	7	9113005	NUT
7	1	21334.01	CLAMP STRIP - REAR COVER
8	1	21308.03	REAR COVER (UPPER) - L/H Build
	1	21308.04	REAR COVER (UPPER) - R/H Build
9	1	43449.02	OVERCENTRE FASTENER
10	1	21313.01	HANDLE
11	2	1069088	POP RIVET
12	1	9501255	SPLIT PIN
13	1	21309.01	TANK COVER - L/H Build
	1	21310.02	TANK COVER - R/H Build
14	5	9143004	SELF-LOCKING NUT
15	2	9313034	SETSCREW
16	2	46041.02	STAND OFF
17	1	43468.11	EDGING STRIP
18	2	9100025	DOMED NUT

COVERS ASSEMBLY (Non Cooler)

Modules: *Illustrated in Left Hand Build*

7155712 – L/H Build (Non Cooler Models)
7155713 – R/H Build (Non Cooler Models)

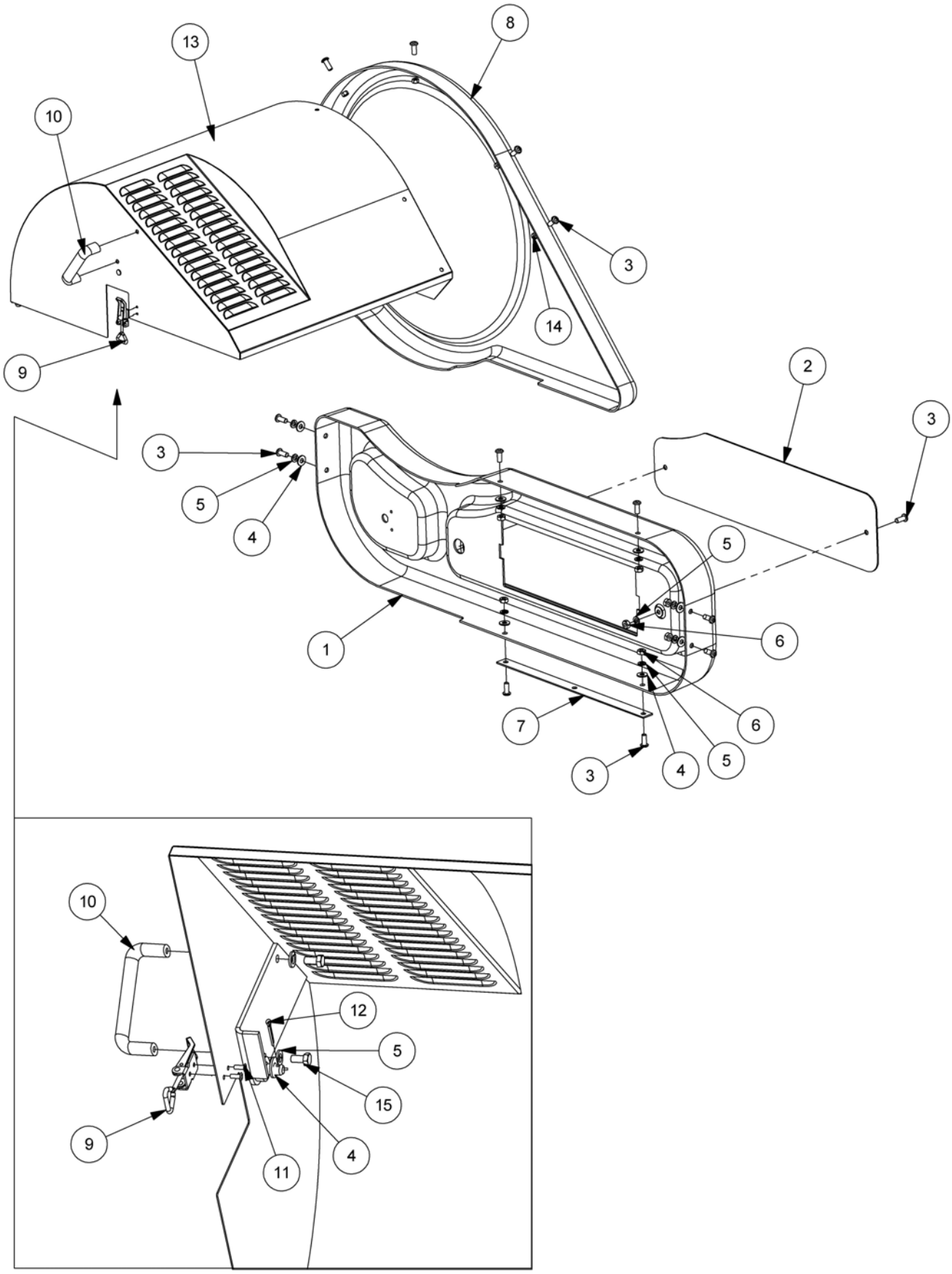

COVERS ASSEMBLY (Non Cooler)

REF.	QTY.	PART No.	DESCRIPTION
		7155712	**COVERS ASSEMBLY - L/H Build without Cooler**
		7155713	**COVERS ASSEMBLY - R/H Build without Cooler**
1	1	21304.03	REAR COVER (LOWER) - L/H Build
	1	21304.04	REAR COVER (LOWER) - R/H Build
2	1	21363.01	BLANK PLATE
3	15	9300154	SCREW
4	10	9100105	FLAT WASHER
5	11	9100205	SPRING WASHER
6	7	9113005	NUT
7	1	21334.01	CLAMP STRIP - REAR COVER
8	1	21308.03	REAR COVER (UPPER) - L/H Build
	1	21308.04	REAR COVER (UPPER) - R/H Build
9	1	43449.02	OVERCENTRE FASTENER
10	1	21313.01	HANDLE
11	2	1069088	POP RIVET
12	1	9501255	SPLIT PIN
13	1	21309.01	TANK COVER - L/H Build
	1	21310.02	TANK COVER - R/H Build
14	5	9143004	SELF-LOCKING NUT
15	2	9313034	SETSCREW

REAR LIGHTING KIT

Module:
7155719

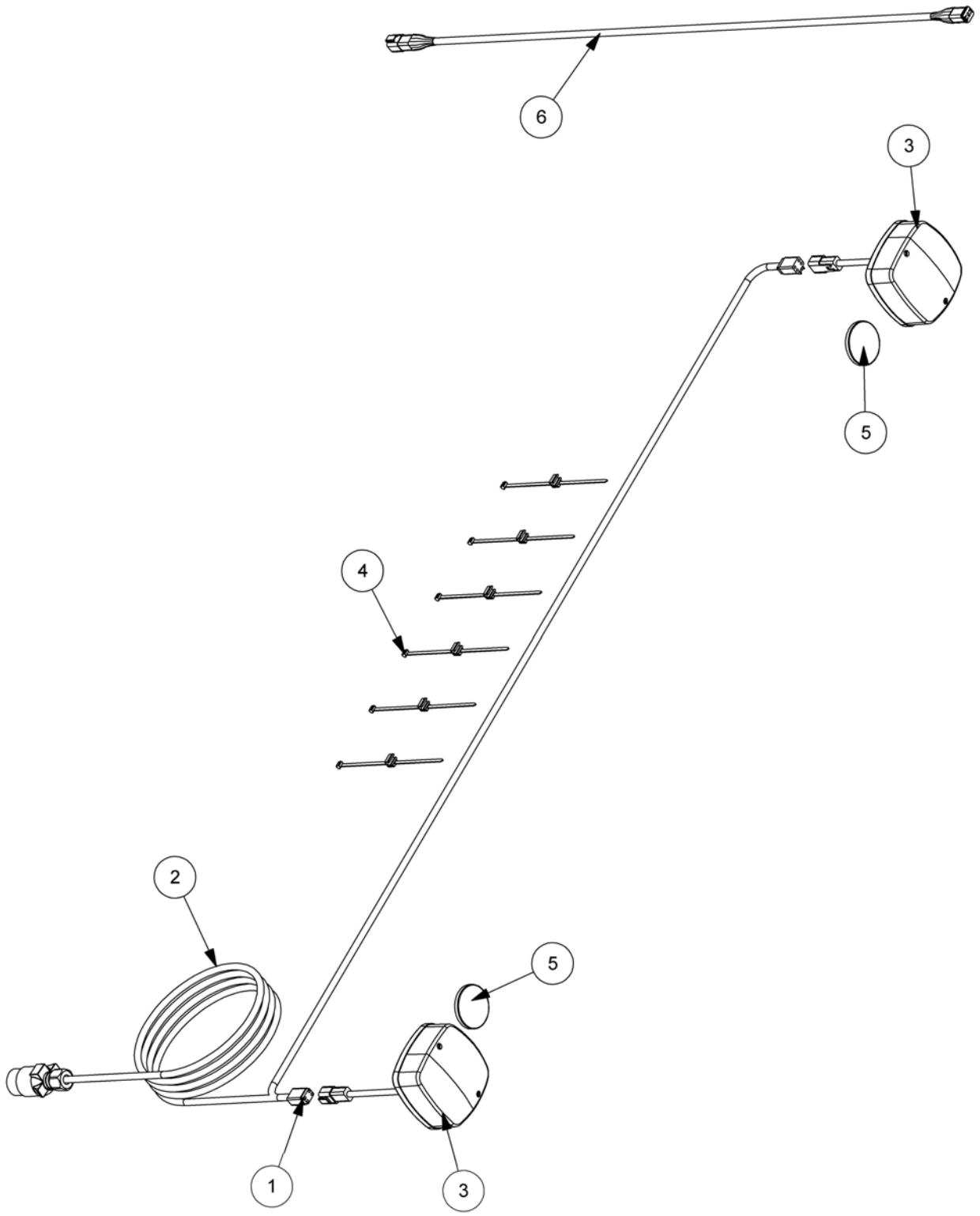

REAR LIGHTING KIT

REF.	QTY.	PART No.	DESCRIPTION
		7155719	**REAR LIGHTING KIT ASSEMBLY**
1	1	45900.02	REAR LIGHTING KIT - *comprising of:*
2	1	45656.02	LIGHTING LOOM c/w PLUGS
3	2	45642.02	COMBINATION LAMP
4	6	21150.01	CABLE TIE - PUSH ON
5	2	45671.01	REFLECTOR - SELF ADHESIVE
6	1	45657.02	EXTENTION LOOM

CAB GUARD KIT

Module:
7313324

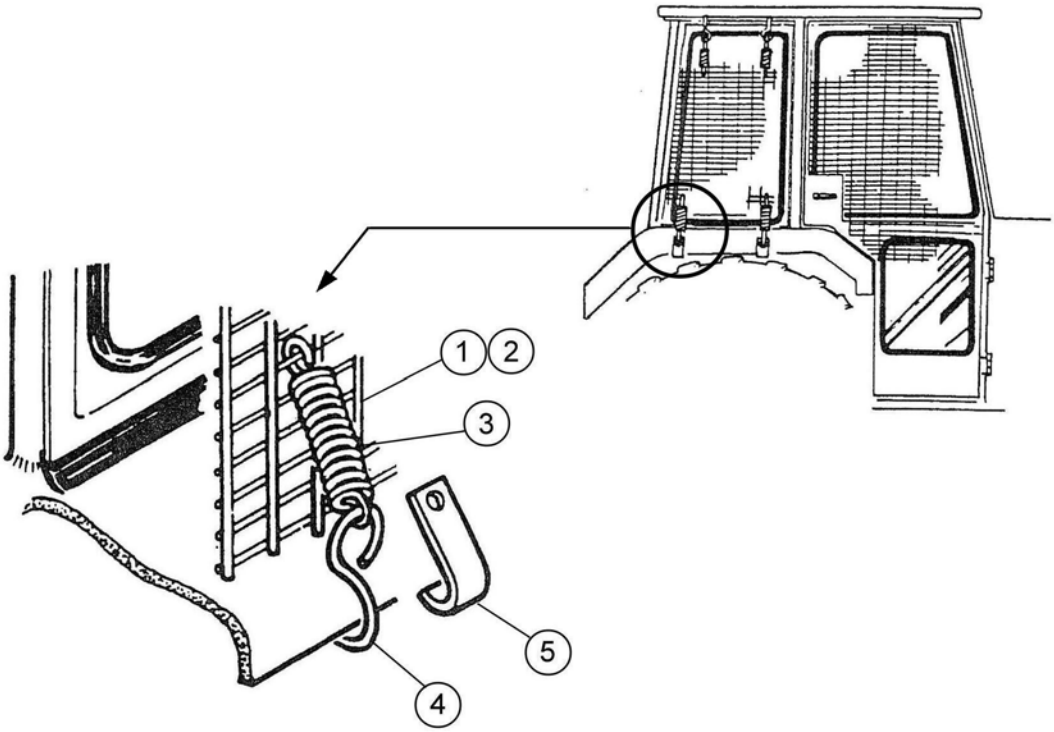

REF.	QTY.	PART No.	DESCRIPTION
		7313324	**CAB GUARD & MOUNTING KIT**
1	1	7313049	GUARD PANEL - LARGE
2	1	7313050	GUARD PANEL - SMALL
3	12	6001064	SPRING
4	6	6001065	HOOK
5	6	7313051	HOOK

MACHINE PACKAGING SUNDRIES

REF.	QTY.	PART No.	DESCRIPTION
		7452769	**PACKING SUNDRIES**
1	1	9313097	SETSCREW
2	3	05.292.23	BOLT
3	1	9143007	CLEVELOK NUT
4	2	9313076	SETSCREW
5	5	9143006	CLEVELOK NUT
6	1	7550030	DIPPER LOCKING STRAP
7	1	21012.01	SLEEVE - PIN PROTECTOR
8	1	09.843.05	DECAL - LIFT POINT
9	1	7193383	PACKING STRAP

MACHINE DECAL KITS

Modules:

7155775 – Basic Decal Kit *(refer to opposite page for specific model decals)*

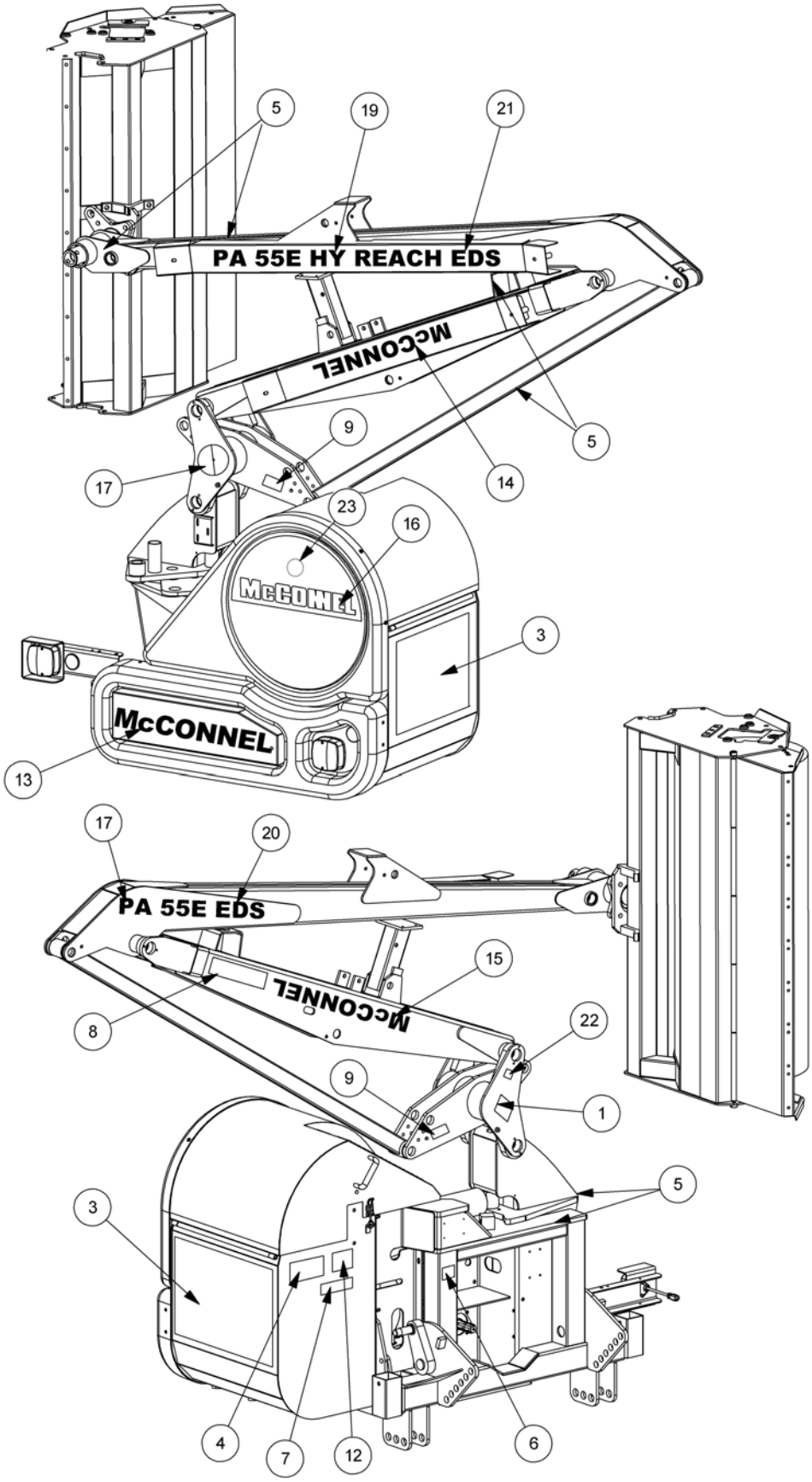

MACHINE DECAL KITS

REF.		QTY.	PART No.	DESCRIPTION
			7155775	**BASIC DECAL KIT - ALL MODELS**
			7155770	**DECAL KIT - PA55 CABLE MODELS**
			7155771	**DECAL KIT - PA55 ELECTRIC MODELS**
			7155772	**DECAL KIT - PA55 PROPORTIONAL MODELS**
			7155773	**DECAL KIT - PA55 EDS MODELS**
			7160770	**DECAL KIT - PA60 CABLE MODELS**
			7160771	**DECAL KIT - PA60 ELECTRIC MODELS**
			7160772	**DECAL KIT - PA60 PROPORTIONAL MODELS**
			7160773	**DECAL KIT - PA60 EDS MODELS**
1		1	7105130	DECAL - READ INSTRUCTION BOOK FIRST
2	*	1	1290352	DECAL - CAB
3		1	1290391	DECAL - GENERAL SAFETY
4		1	00756494	DECAL - DRIVELINE HAZARD
5		5	02962764	DECAL - PINCH POINT
6		1	09.811.03	DECAL - PTO SPEED (500RPM)
7		1	7135295	DECAL - TIGHTEN CHECK CHAINS
8		1	1290403	DECAL - BREAKAWAY WARNING
9		2	1290074	DECAL - SLING HERE
10		1	1290406	DECAL - TRANSPORT WARNING
11	**	1	8402135	DECAL - CAUTION
12		1	1290023	DECAL - OIL FILTER
13		1	1290588	DECAL - McCONNEL (Models without Cooler)
		1	1290598	DECAL - McCONNEL (Models with Cooler)
14		1	1290588	DECAL - McCONNEL (SILVER)
15		1	1290255	DECAL - McCONNEL (BLACK)
16		1	1290648	DECAL - McCONNEL ROUNDEL (Reflective)
17		1	1290296	DECAL - LOGO
18		1	1290594	DECAL - PA55
		1	1290595	DECAL - PA55E
		1	1290596	DECAL - PA60
		1	1290597	DECAL - PA60E
19		1	1290589	DECAL - PA55 HY-REACH
		1	1290590	DECAL - PA55E HY-REACH
		1	1290591	DECAL - PA60 HY-REACH
		1	1290592	DECAL - PA60E HY-REACH
20		1	1290518	DECAL - EDS (BLACK)
21		1	1290593	DECAL - E.D.S. (SILVER)
22		1	21365.01	DECAL - PATENT (EDS Models only)
23		1	1290571	DECAL - QUEENS AWARD

* *Decal supplied loose for fitment in tractor cab*

** *Decal supplied loose for fitment on (or near to) the controls in tractor cab.*

MAGNETIC SIGN KIT (Optional)

Module:
7155750

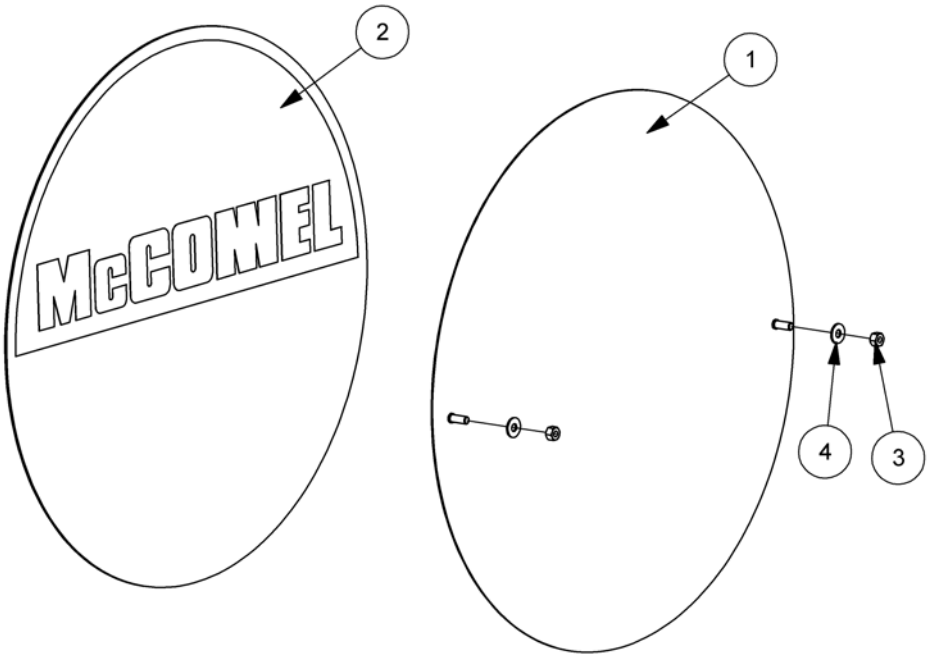

REF.	QTY.	PART No.	DESCRIPTION
		7155750	**REAR MAGNETIC SIGN KIT**
1	1	21361.01	SIGN CARRIER
2	1	21360.01	MAGNETIC STICKER
3	2	9143004	SELF-LOCKING NUT
4	2	9100104	FLAT WASHER

Side 1. McConnel Decal

Side 2. Direction Arrow

The illustrations above show both sides of the magnetic sign – the signs are suitable for both Left and Right Hand machines as they can be mounted such that the arrow will point in either direction

DEBRIS BLOWER MOUNTING KIT

Modules:
7150770 – L/H Build
7150771 – R/H Build

Illustrated in Left Hand Build

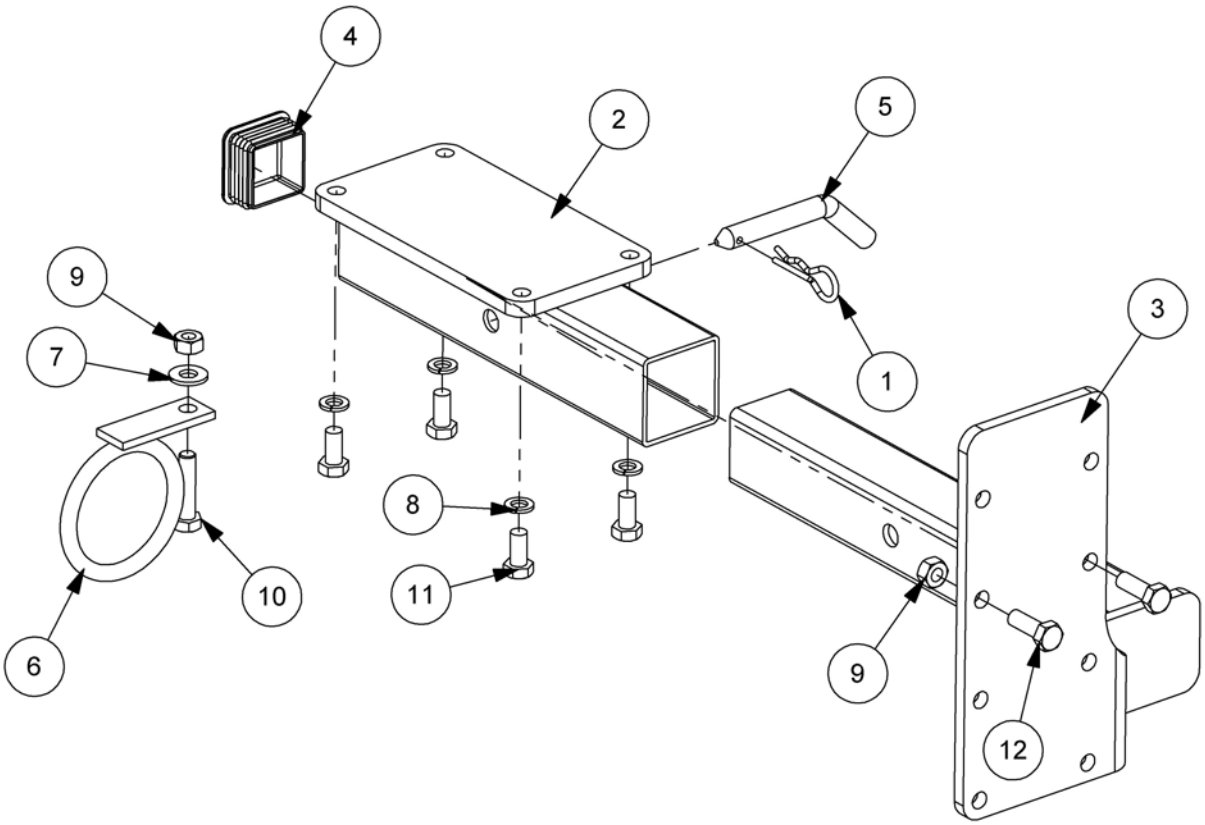

REF.	QTY.	PART No.	DESCRIPTION
		7150770	**DEBRIS BLOWER MOUNTING KIT - L/H Machines**
		7150771	**DEBRIS BLOWER MOUNTING KIT - R/H Machines**
1	1	0431105	SPRING COTTER
2	1	43492.01	BLOWER BRACKET
3	1	43492.05	BLOWER BRACKET - L/H Build
	1	43492.06	BLOWER BRACKET - R/H Build
4	1	7191108	PLASTIC PLUG
5	1	7192023	LEG PIN
6	1	7319282	HOSE RING
7	1	9100106	FLAT WASHER
8	4	9100206	SPRING WASHER
9	3	9143006	SELF-LOCKING NUT
10	1	9213106	BOLT
11	4	9313056	SETSCREW
12	2	9313076	SETSCREW

Suitable for the following machines:
PA32, PA41, PA45, PA47 Mk1*, PA47 Mk2, PA48, PA50Mk1*, PA50 Mk2, PA55/60*
(without lightbars)*